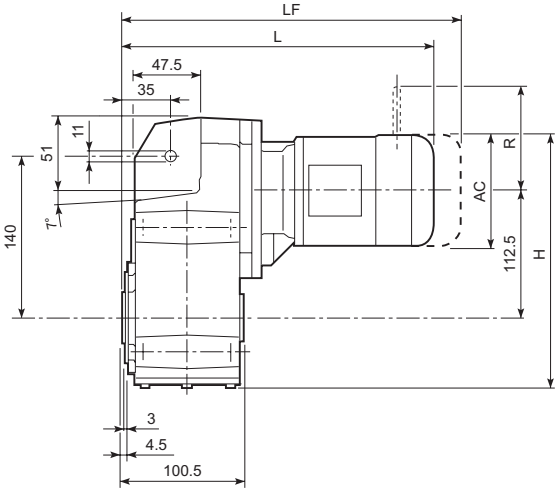

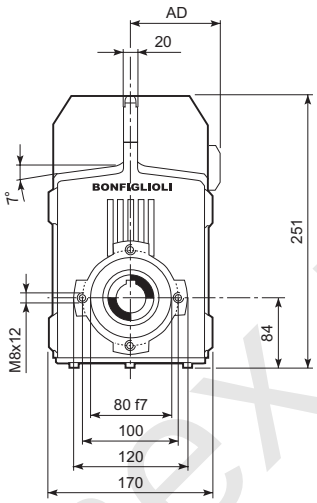

								M_FD M_FA		M_FD		M_FA	
			AC	H	L	AD	Kg	LF	Kg	R	AD	R	AD
F 10 2	**S05**	**M05**	121	220.5	311.5	95	12	377.5	13	96	119	116	95
F 10 2	**S1**	**M1S**	138	265.5	316.5	108	12	379.5	15	103	132	124	108
F 10 2	**S1**	**M1L**	138	265.5	340.5	108	14	401.5	17	103	132	124	108
F 10 2	**S2**	**M2S**	156	274.5	369.5	119	18	439.5	21	129	143	134	119
F 10 2	**S3**	**M3S**	195	294	412.5	142	22	508.5	30	160	155	160	142
F 10 2	**S3**	**M3L**	195	294	444.5	142	24	535.5	31	160	155	160	142

www.reduktor-mex.ru

F 10...P(IEC)

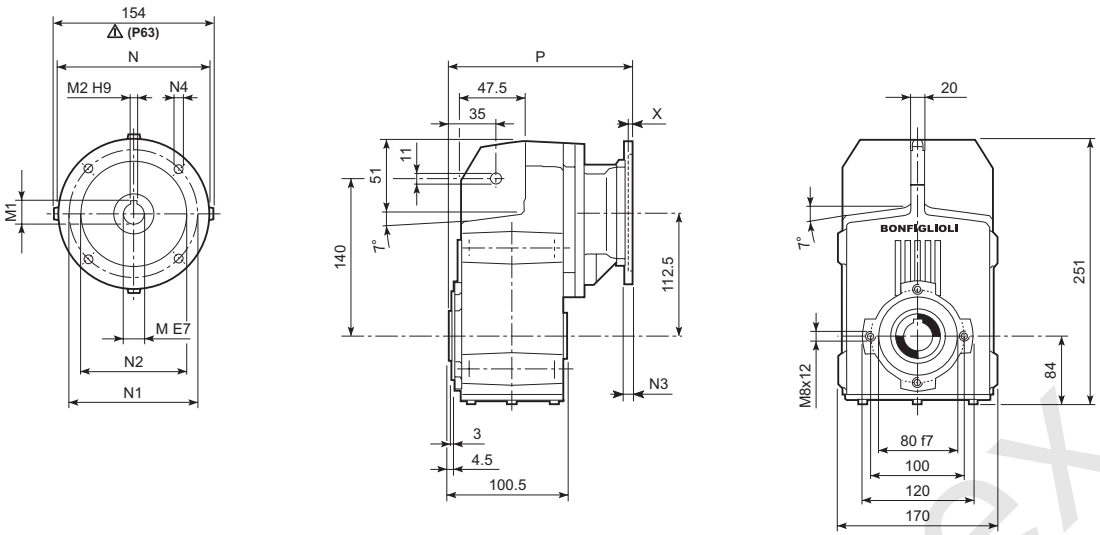

		M	M1	M2	N	N1	N2	N3	N4	X	P	Kg
F 10 2	**P63**	11	12.8	4	140	115	95	—	M8x19	4	185.5	8
F 10 2	**P71**	14	16.3	5	160	130	110	—	M8x16	4.5	185.5	8
F 10 2	**P80**	19	21.8	6	200	165	130	—	M10x12	4	205	9
F 10 2	**P90**	24	27.3	8	200	165	130	—	M10x12	4	205	9
F 10 2	**P100**	28	31.3	8	250	215	180	—	M12x16	4.5	215	13
F 10 2	**P112**	28	31.3	8	250	215	180	—	M12x16	4.5	215	13

F 10...HS

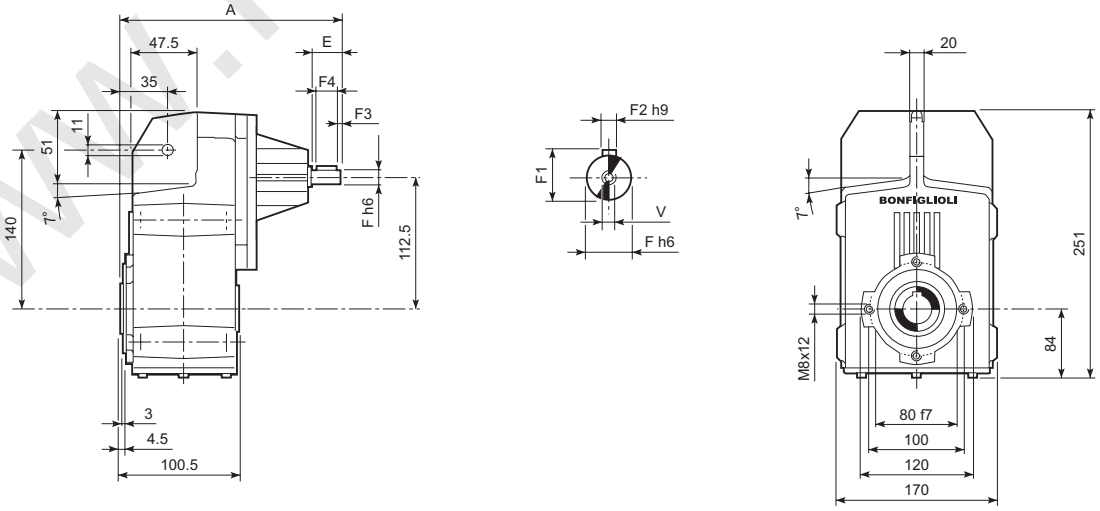

		A	E	F	F1	F2	F3	F4	V	Kg
F 10 2	**HS**	192	40	16	18	5	2.5	35	M6x16	7.5

www.reduktor-mex.ru

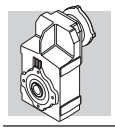

F 10...SK / SC

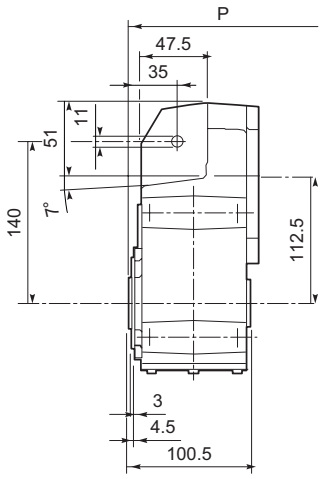

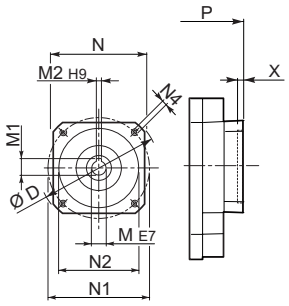

SK...

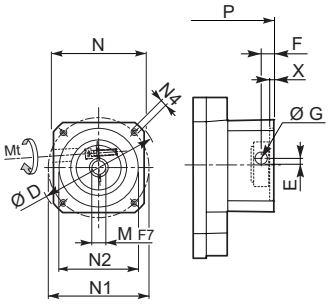

SC...

		D	M	M1	M2	N	N1	N2	N4	X	P	Kg
F 10 2	**SK 60A**	102	11	12.8	4	82	75	60	M5x10	3.5	157	8
F 10 2	**SK 60B**	102	14	16.3	5	82	75	60	M5x10	4	164	8
F 10 2	**SK 80A**	115	14	16.3	5	90	100	80	M6x12	4	164	8
F 10 2	**SK 80C**	120	19	21.8	6	96	100	80	M6x12	4	205	9
F 10 2	**SK 95A**	130	14	16.3	5	102	115	95	M8x12	4	205	9
F 10 2	**SK 95B**	130	19	21.8	6	102	115	95	M8x12	4	205	9
F 10 2	**SK 95C**	130	24	27.3	8	102	115	95	M8x12	4	205	9
F 10 2	**SK 110A**	150	19	21.8	6	120	130	110	M8x12	5	205	9
F 10 2	**SK 110B**	150	24	27.3	8	120	130	110	M8x12	5	205	9

		Mt		D	E	F	G	M	N	N1	N2	N4	X	P	Kg
F 10 2	**SC 60A**	M6	15 Nm	102	7	12.5	12.5	11	82	75	60	M5x10	4	184	8
F 10 2	**SC 60B**	M6	15 Nm	102	7	12.5	12.5	14	82	75	60	M5x10	4	184	9
F 10 2	**SC 80A**	M6	15 Nm	115	6	12.5	12.5	14	90	100	80	M6x12	4	184	9
F 10 2	**SC 80C**	M6	15 Nm	120	15.5	14.5	17.75	19	96	100	80	M6x12	4	228.5	10
F 10 2	**SC 95A**	M6	15 Nm	130	16.5	15	17.75	14	102	115	95	M8x16	4	228.5	10
F 10 2	**SC 95B**	M6	15 Nm	130	16.5	15	17.75	19	102	115	95	M8x16	4	228.5	10
F 10 2	**SC 95C**	M6	15 Nm	130	16.5	15	17.75	24	102	115	95	M8x16	4	228.5	10
F 10 2	**SC 110A**	M6	15 Nm	150	16.5	16	17.75	19	120	130	110	M8x16	5	228.5	11
F 10 2	**SC 110B**	M6	15 Nm	150	16.5	16	17.75	24	120	130	110	M8x16	5	228.5	11

www.redukt0r-mex.ru

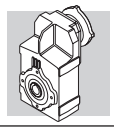

F 10...H

H25
STANDARD

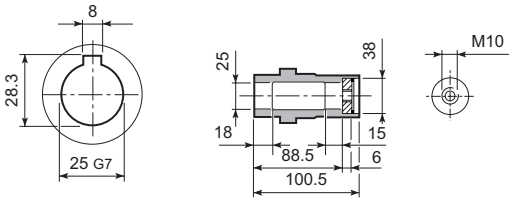

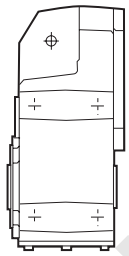

F 10...S

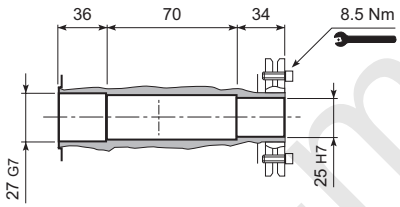

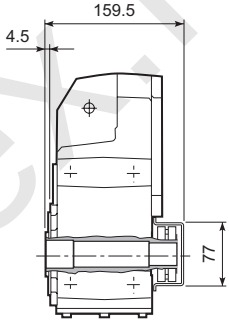

F 10...R

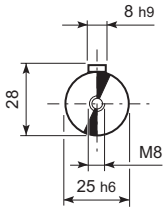

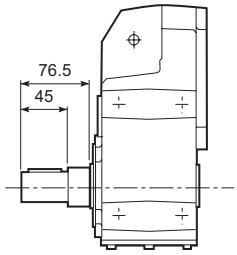

F 10...QF

	Ø
QF25	25
QF30	30

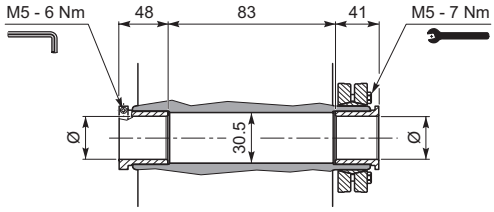

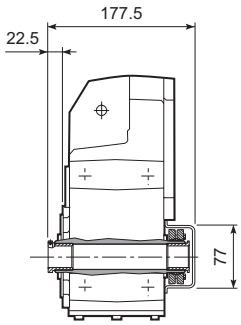

F 10...F...

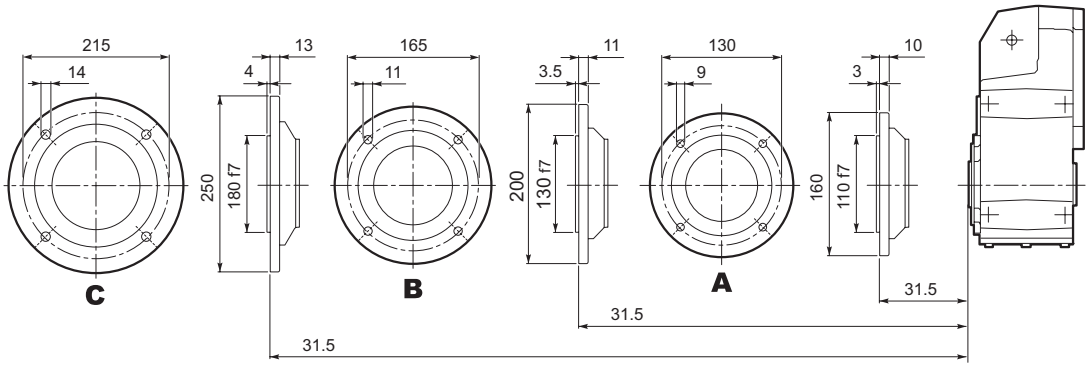

www.reduktor-mex.ru

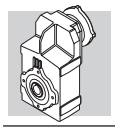

F 20...M

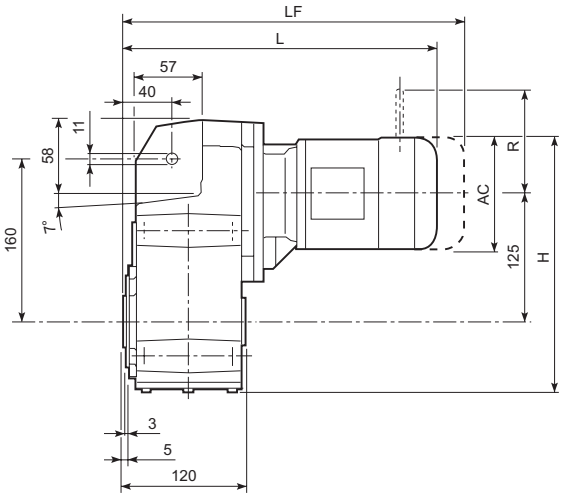

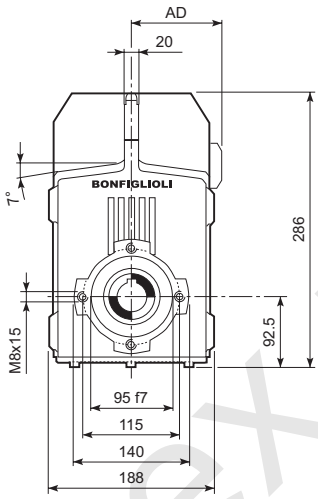

								M_FD M_FA		M_FD		M_FA	
			AC	H	L	AD	Kg	LF	Kg	R	AD	R	AD
F 20 2	**S05**	**M05**	121	278.2	323.5	95	15	389.5	17	96	119	116	95
F 20 2	**S1**	**M1S**	138	286.7	328.5	108	16	391.5	19	103	132	124	108
F 20 2	**S1**	**M1L**	138	286.7	352.5	108	17	413.5	20	103	132	124	108
F 20 2	**S2**	**M2S**	156	295.7	381.5	119	21	451.5	25	129	143	134	119
F 20 2	**S3**	**M3S**	195	315.2	424.5	142	26	520.5	33	160	155	160	142
F 20 2	**S3**	**M3L**	195	315.2	456.5	142	31	547.5	38	160	155	160	142
F 20 3	**S05**	**M05**	121	278.2	379	95	17	445	18	96	119	116	95
F 20 3	**S1**	**M1S**	138	286.7	384	108	18	447	20	103	132	124	108
F 20 3	**S1**	**M1L**	138	286.7	408	108	19	469	21	103	132	124	108
F 20 3	**S2**	**M2S**	156	295.7	437	119	22	507	26	129	143	134	119
F 20 3	**S3**	**M3S**	195	315.2	480	142	27	576	34	160	155	160	142
F 20 3	**S3**	**M3L**	195	315.2	512	142	32	603	39	160	155	160	142

www.reduktor-mex.ru

F 20...P(IEC)

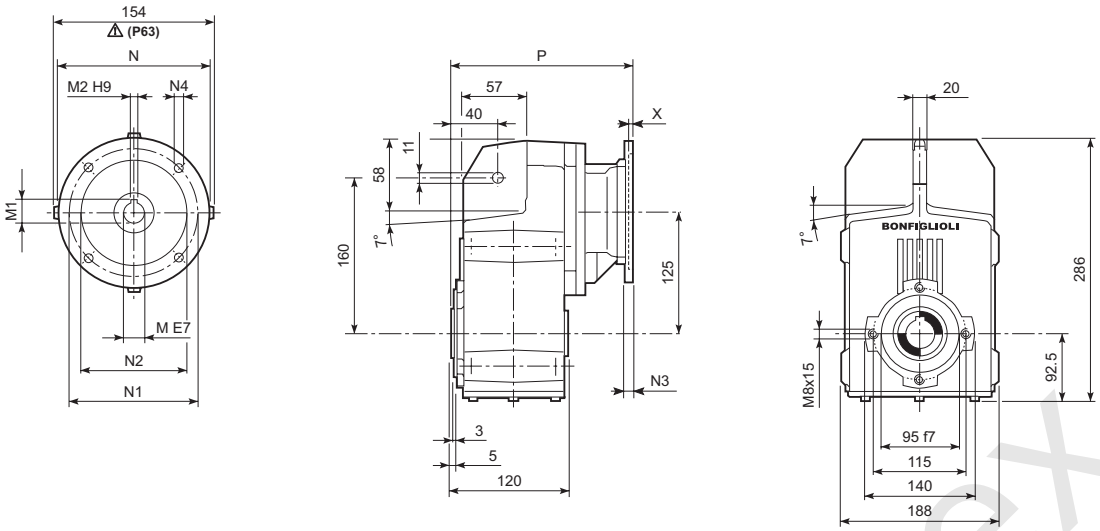

		M	M1	M2	N	N1	N2	N3	N4	X	P	Kg
F 20 2	**P63**	11	12.8	4	140	115	95	—	M8x19	4	197.5	12
F 20 2	**P71**	14	16.3	5	160	130	110	—	M8x16	4.5	197.5	12
F 20 2	**P80**	19	21.8	6	200	165	130	—	M10x12	4	217	13
F 20 2	**P90**	24	27.3	8	200	165	130	—	M10x12	4	217	12
F 20 2	**P100**	28	31.3	8	250	215	180	—	M12x16	4.5	227	16
F 20 2	**P112**	28	31.3	8	250	215	180	—	M12x16	4.5	227	16
F 20 3	**P63**	11	12.8	4	140	115	95	—	M8x19	4	253	13
F 20 3	**P71**	14	16.3	5	160	130	110	—	M8x16	4.5	253	13
F 20 3	**P80**	19	21.8	6	200	165	130	—	M10x12	4	272.5	14
F 20 3	**P90**	24	27.3	8	200	165	130	—	M10x12	4	272.5	14
F 20 3	**P100**	28	31.3	8	250	215	180	—	M12x16	4.5	282.5	18
F 20 3	**P112**	28	31.3	8	250	215	180	—	M12x16	4.5	282.5	18

F 20...HS

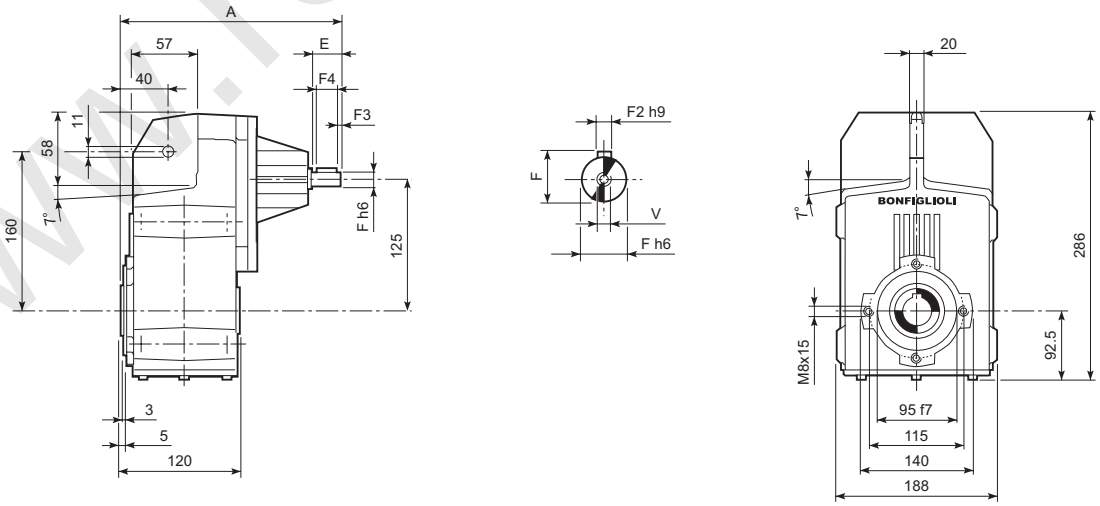

		A	E	F	F1	F2	F3	F4	V	Kg
F 20 2	**HS**	247.5	40	19	21.5	6	2.5	35	M6x16	11.5
F 20 3		260	40	16	18	5	2.5	35	M6x16	12.4

www.redukto-mex.ru

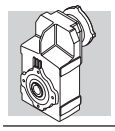

F 20...SK / SC

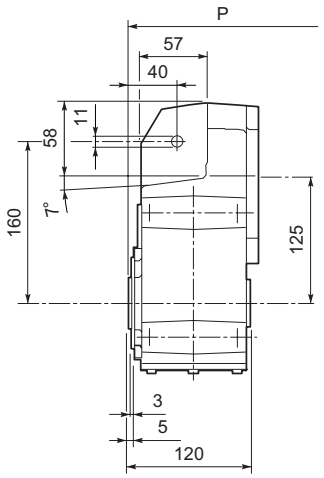

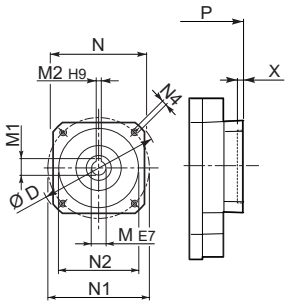

SK...

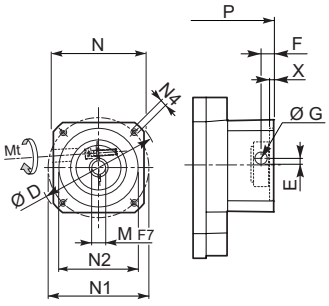

SC...

											2x		3x	
		D	M	M1	M2	N	N1	N2	N4	X	P	Kg	P	Kg
F 20 2/3	**SK 60A**	102	11	12.8	4	82	75	60	M5x10	3.5	169	11	224.5	12
F 20 2/3	**SK 60B**	102	14	16.3	5	82	75	60	M5x10	4	176	12	231.5	13
F 20 2/3	**SK 80A**	115	14	16.3	5	90	100	80	M6x12	4	217	12	231.5	13
F 20 2/3	**SK 80C**	120	19	21.8	6	96	100	80	M6x12	4	217	13	272.5	14
F 20 2/3	**SK 95A**	130	14	16.3	5	102	115	95	M8x12	4	217	13	272.5	14
F 20 2/3	**SK 95B**	130	19	21.8	6	102	115	95	M8x12	4	217	13	272.5	14
F 20 2/3	**SK 95C**	130	24	27.3	8	102	115	95	M8x12	4	217	13	272.5	14
F 20 2/3	**SK 110A**	150	19	21.8	6	120	130	110	M8x12	5	217	13	272.5	14
F 20 2/3	**SK 110B**	150	24	27.3	8	120	130	110	M8x12	5	217	13	272.5	14

													2x		3x	
			Mt	D	E	F	G	M	N	N1	N2	N4	X	P	Kg	P	Kg
F 20 2/3	**SC 60A**	M6	15 Nm	102	7	12.5	12.5	11	82	75	60	M5x10	4	196	12	251.5	13
F 20 2/3	**SC 60B**	M6	15 Nm	102	7	12.5	12.5	14	82	75	60	M5x10	4	196	13	251.5	14
F 20 2/3	**SC 80A**	M6	15 Nm	115	6	12.5	12.5	14	90	100	80	M6x12	4	196	13	251.5	14
F 20 2/3	**SC 80C**	M6	15 Nm	120	15.5	14.5	17.75	19	96	100	80	M6x12	4	240.5	14	296	15
F 20 2/3	**SC 95A**	M6	15 Nm	130	16.5	15	17.75	14	102	115	95	M8x16	4	240.5	14	296	15
F 20 2/3	**SC 95B**	M6	15 Nm	130	16.5	15	17.75	19	102	115	95	M8x16	4	240.5	14	296	15
F 20 2/3	**SC 95C**	M6	15 Nm	130	16.5	15	17.75	24	102	115	95	M8x16	4	240.5	14	296	15
F 20 2/3	**SC 110A**	M6	15 Nm	150	16.5	16	17.75	19	120	130	110	M8x16	5	240.5	15	296	16
F 20 2/3	**SC 110B**	M6	15 Nm	150	16.5	16	17.75	24	120	130	110	M8x16	5	240.5	15	296	16

www.redukto-rnex.ru

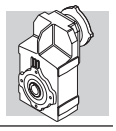

F 20...H

H30
STANDARD

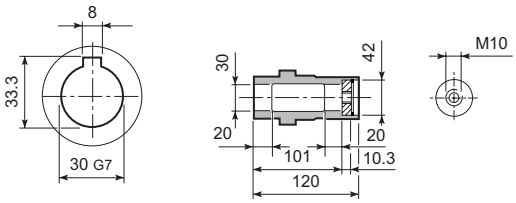

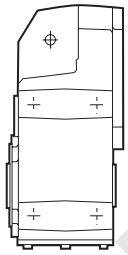

F 20...S

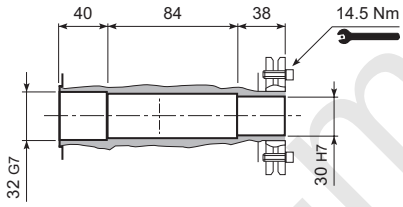

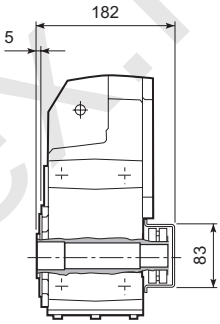

F 20...R

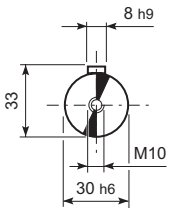

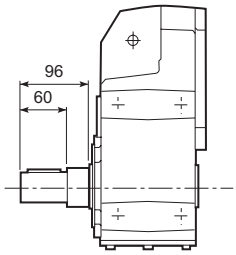

F 20...QF

	Ø
QF25	25
QF30	30

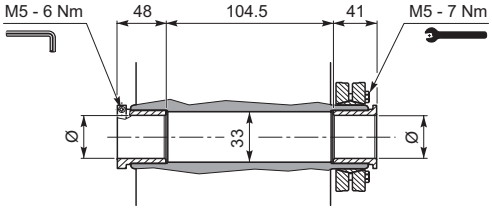

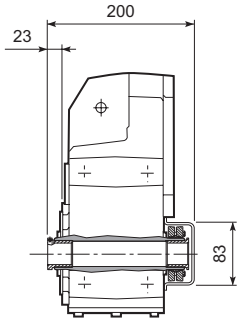

F 20...F...

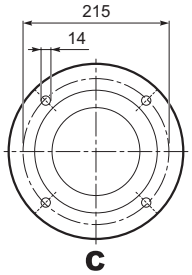

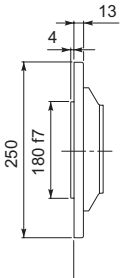

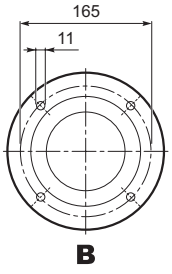

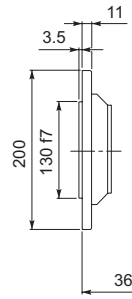

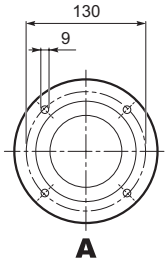

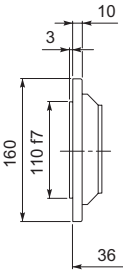

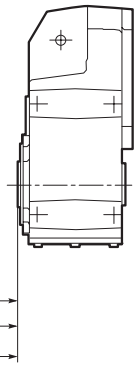

www.reduktor-mex.ru

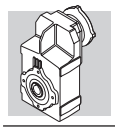

F 25...M

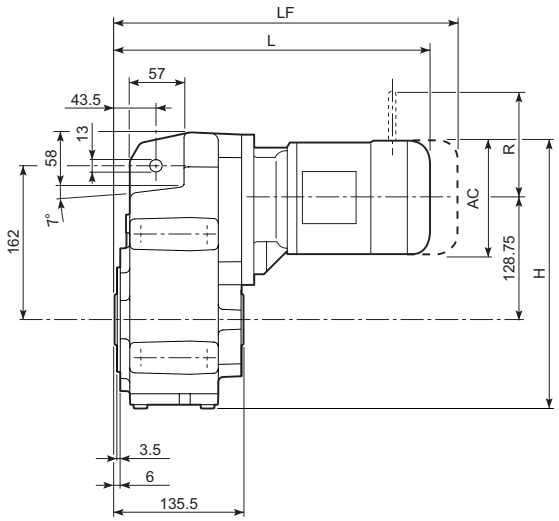

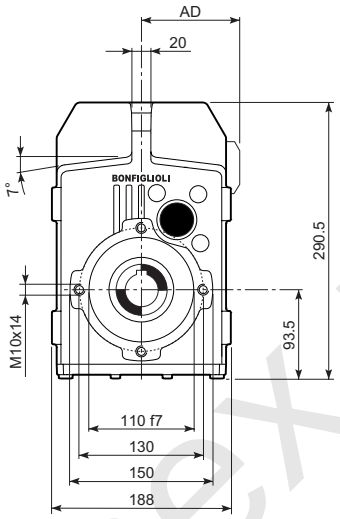

								M_FD M_FA		M_FD		M_FA	
			AC	H	L	AD	Kg	LF	Kg	R	AD	R	AD
F 25 2/3	**S05**	**M05**	121	283	339	95	15	405	17	96	119	116	95
F 25 2/3	**S1**	**M1S**	138	291.5	344	108	16	407	19	103	132	124	108
F 25 2/3	**S1**	**M1L**	138	291.5	368	108	17	429	20	103	132	124	108
F 25 2/3	**S2**	**M2S**	156	300.5	397	119	21	467	25	129	143	134	119
F 25 2/3	**S3**	**M3S**	195	320	440	142	26	536	33	160	155	160	142
F 25 2/3	**S3**	**M3L**	195	320	472	142	31	563	38	160	155	160	142
F 25 4	**S05**	**M05**	121	283	394.5	95	17	460.5	18	96	119	116	95
F 25 4	**S1**	**M1S**	138	291.5	399.5	108	18	462.5	20	103	132	124	108
F 25 4	**S1**	**M1L**	138	291.5	423.5	108	19	484.5	21	103	132	124	108
F 25 4	**S2**	**M2S**	156	300.5	452.5	119	22	522.5	26	129	143	134	119
F 25 4	**S3**	**M3S**	195	320	495.5	142	27	591.5	34	160	155	160	142
F 25 4	**S3**	**M3L**	195	320	527.5	142	32	618.5	39	160	155	160	142

www.reduktor-mex.ru

F 25...P(IEC)

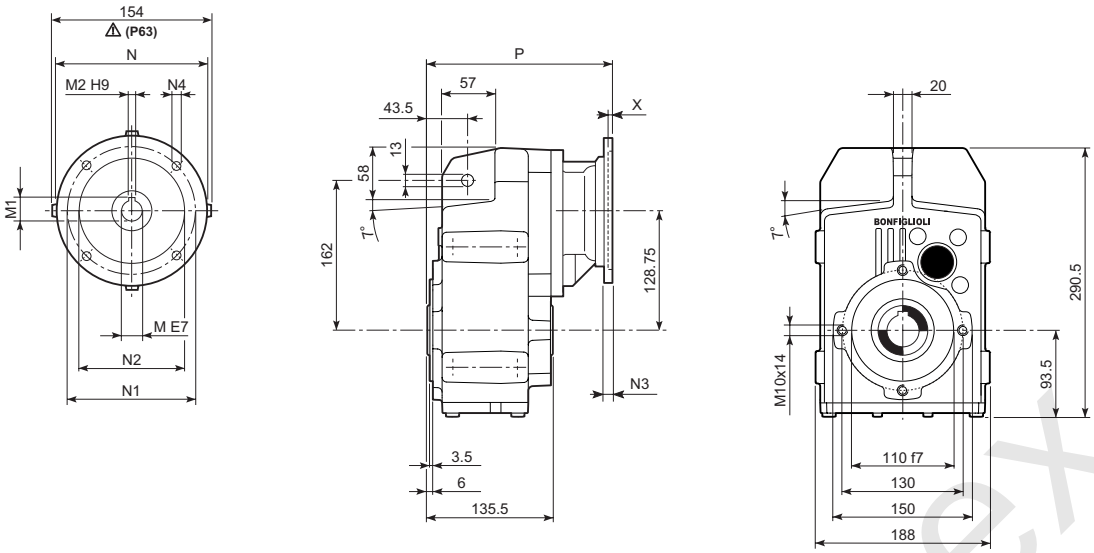

		M	M1	M2	N	N1	N2	N3	N4	X	P	Kg
F 25 2/3	**P63**	11	12.8	4	140	115	95	—	M8x19	4	213	12
F 25 2/3	**P71**	14	16.3	5	160	130	110	—	M8x16	4.5	213	12
F 25 2/3	**P80**	19	21.8	6	200	165	130	—	M10x12	4	232.5	13
F 25 2/3	**P90**	24	27.3	8	200	165	130	—	M10x12	4	232.5	13
F 25 2/3	**P100**	28	31.3	8	250	215	180	—	M12x16	4.5	242.5	16
F 25 2/3	**P112**	28	31.3	8	250	215	180	—	M12x16	4.5	242.5	16
F 25 4	**P63**	11	12.8	4	140	115	95	—	M8x19	4	268.5	13
F 25 4	**P71**	14	16.3	5	160	130	110	—	M8x16	4.5	268.5	13
F 25 4	**P80**	19	21.8	6	200	165	130	—	M10x12	4	288	14
F 25 4	**P90**	24	27.3	8	200	165	130	—	M10x12	4	288	14
F 25 4	**P100**	28	31.3	8	250	215	180	—	M12x16	4.5	298	18
F 25 4	**P112**	28	31.3	8	250	215	180	—	M12x16	4.5	298	18

F 25...HS

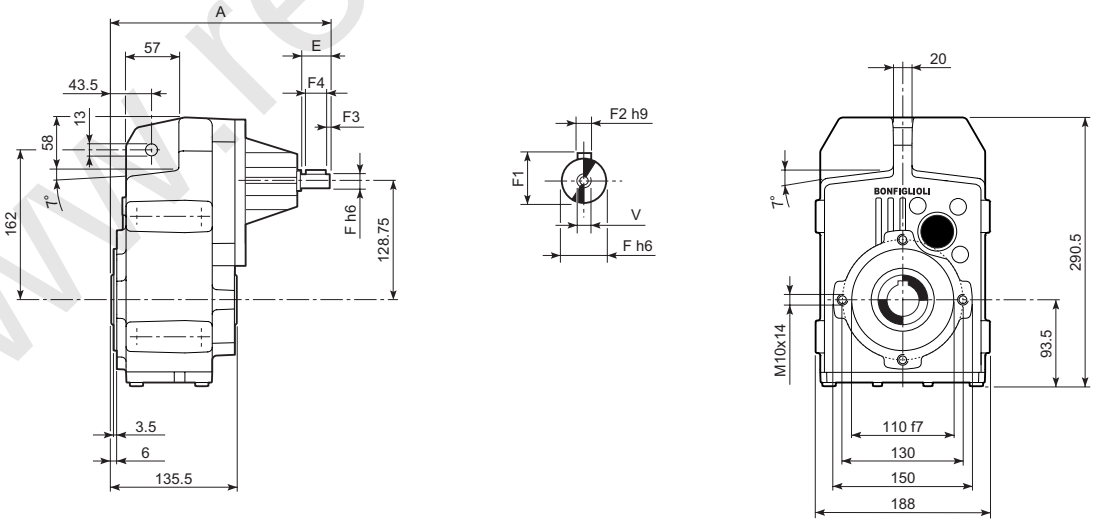

		A	E	F	F1	F2	F3	F4	V	Kg
F 25 2		263	40	19	21.5	6	2.5	35	M6x16	11.5
F 25 3	**HS**	263	40	19	21.5	6	2.5	35	M6x16	11.5
F 25 4		275.5	40	16	18	5	2.5	35	M6x16	12.5

www.redukTor-mex.ru

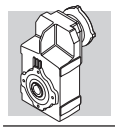

F 25...SK / SC

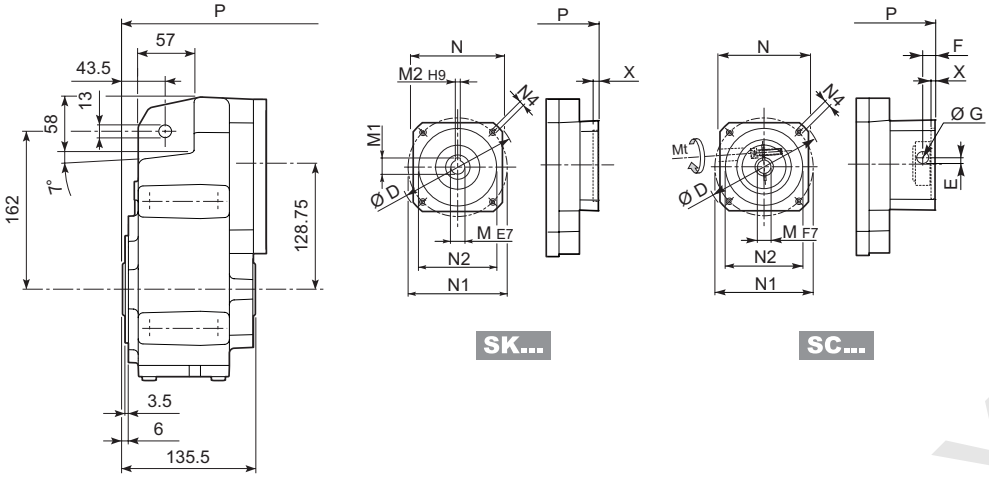

		D	M	M1	M2	N	N1	N2	N4	X	2/3x P	2/3x Kg	4x P	4x Kg
F 25 2/3/4	SK 60A	102	11	12.8	4	82	75	60	M5x10	3.5	184.5	11	240	12
F 25 2/3/4	SK 60B	102	14	16.3	5	82	75	60	M5x10	4	191.5	12	247	13
F 25 2/3/4	SK 80A	115	14	16.3	5	90	100	80	M6x12	4	191.5	12	247	13
F 25 2/3/4	SK 80C	120	19	21.8	6	96	100	80	M6x12	4	232.5	13	288	14
F 25 2/3/4	SK 95A	130	14	16.3	5	102	115	95	M8x12	4	232.5	13	288	14
F 25 2/3/4	SK 95B	130	19	21.8	6	102	115	95	M8x12	4	232.5	13	288	14
F 25 2/3/4	SK 95C	130	24	27.3	8	102	115	95	M8x12	4	232.5	13	288	14
F 25 2/3/4	SK 110A	150	19	21.8	6	120	130	110	M8x12	5	232.5	13	288	14
F 25 2/3/4	SK 110B	150	24	27.3	8	120	130	110	M8x12	5	232.5	13	288	14

			Mt	D	E	F	G	M	N	N1	N2	N4	X	2/3x P	2/3x Kg	4x P	4x Kg
F 25 2/3/4	SC 60A	M6	15 Nm	102	7	12.5	12.5	11	82	75	60	M5x10	4	211.5	12	267	13
F 25 2/3/4	SC 60B	M6	15 Nm	102	7	12.5	12.5	14	82	75	60	M5x10	4	211.5	13	267	14
F 25 2/3/4	SC 80A	M6	15 Nm	115	6	12.5	12.5	14	90	100	80	M6x12	4	211.5	13	267	14
F 25 2/3/4	SC 80C	M6	15 Nm	120	15.5	14.5	17.75	19	96	100	80	M6x12	4	256	14	311.5	15
F 25 2/3/4	SC 95A	M6	15 Nm	130	16.5	15	17.75	14	102	115	95	M8x16	4	256	14	311.5	15
F 25 2/3/4	SC 95B	M6	15 Nm	130	16.5	15	17.75	19	102	115	95	M8x16	4	256	14	311.5	15
F 25 2/3/4	SC 95C	M6	15 Nm	130	16.5	15	17.75	24	102	115	95	M8x16	4	256	14	311.5	15
F 25 2/3/4	SC 110A	M6	15 Nm	150	16.5	16	17.75	19	120	130	110	M8x16	5	256	15	311.5	16
F 25 2/3/4	SC 110B	M6	15 Nm	150	16.5	16	17.75	24	120	130	110	M8x16	5	256	15	311.5	16

www.redukto-rnex.ru

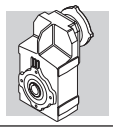

F 25...H

H35
STANDARD

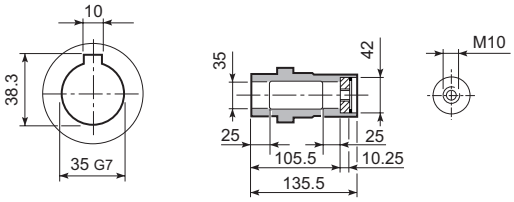

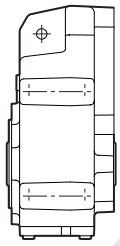

F 25...S

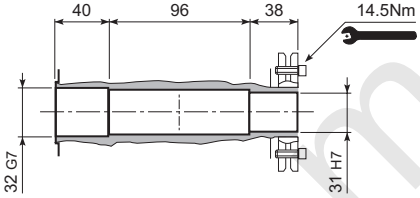

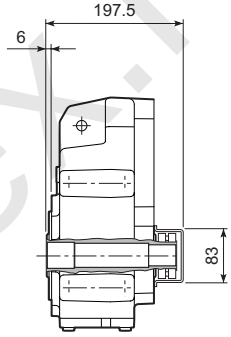

F 25...R

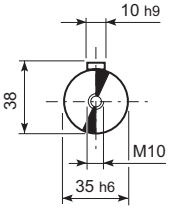

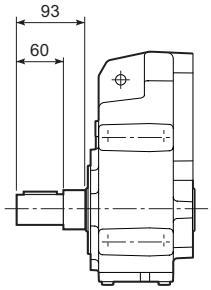

F 25...QF

	Ø
QF30	30
QF32	32

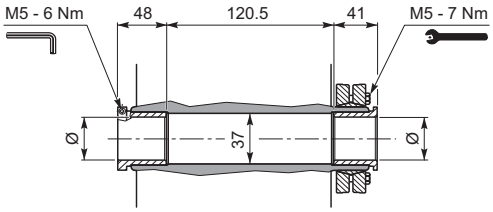

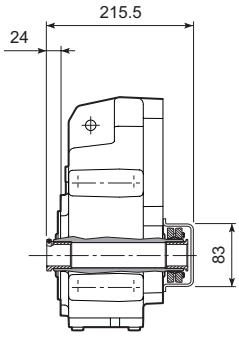

F 25...F...

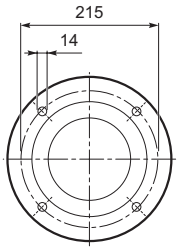

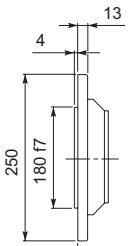

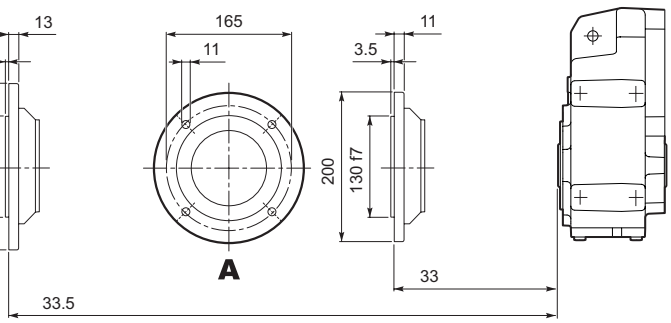

www.reduktor-mey.ru

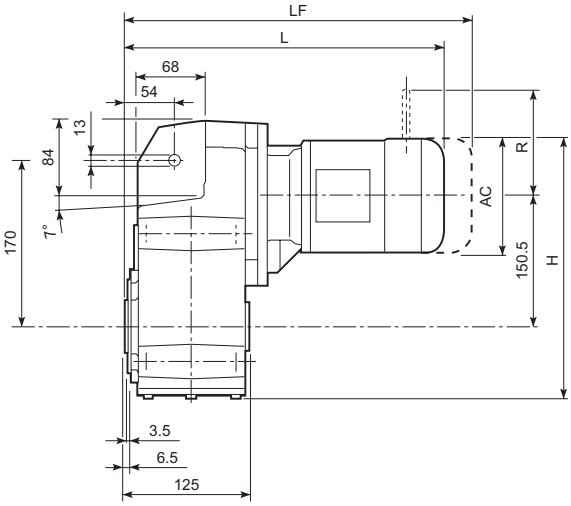

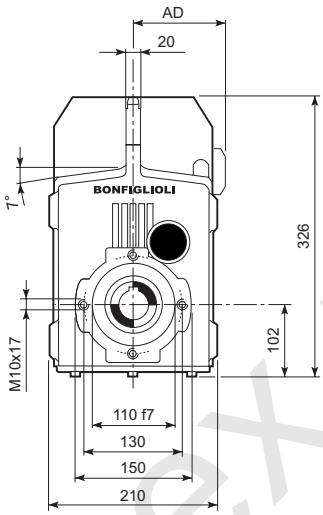

								M_FD M_FA		M_FD		M_FA	
			AC	H	L	AD	Kg	LF	Kg	R	AD	R	AD
F 31 2/3	**S1**	**M1S**	138	321.3	356.5	108	21	419.5	23	103	132	124	108
F 31 2/3	**S1**	**M1L**	138	321.3	380.5	108	22	441.5	25	103	132	124	108
F 31 2/3	**S2**	**M2S**	156	330.3	409.5	119	26	479.5	30	129	143	134	119
F 31 2/3	**S3**	**M3S**	195	349.8	452.5	142	31	548.5	38	160	155	160	142
F 31 2/3	**S3**	**M3L**	195	349.8	484.5	142	38	575.5	45	160	155	160	142
F 31 4	**S05**	**M05**	121	312.8	409	95	20	475	22	96	119	116	95
F 31 4	**S1**	**M1S**	138	321.3	414	108	21	477	24	103	132	124	108
F 31 4	**S1**	**M1L**	138	321.3	438	108	22	499	25	103	132	124	108
F 31 4	**S2**	**M2S**	156	330.3	467	119	26	537	31	129	143	134	119
F 31 4	**S3**	**M3S**	195	349.8	510	142	31	606	39	160	155	160	142
F 31 4	**S3**	**M3L**	195	349.8	542	142	38	633	46	160	155	160	142

www.reduktor-mex.ru

F 31...P(IEC)

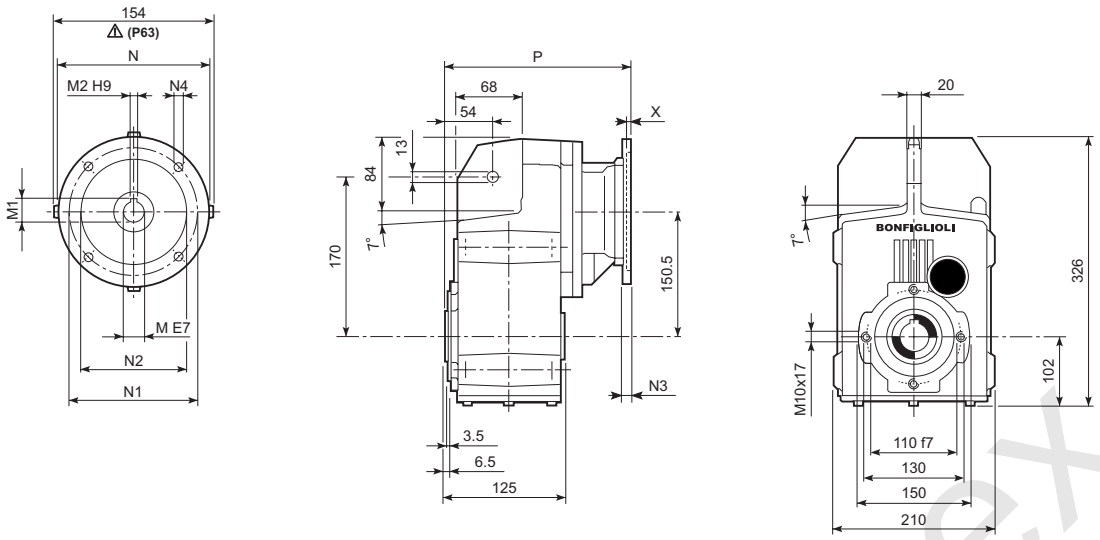

		M	M1	M2	N	N1	N2	N3	N4	X	P	Kg
F 31 2/3	**P63**	11	12.8	4	140	115	95	—	M8x19	4	225.5	17
F 31 2/3	**P71**	14	16.3	5	160	130	110	—	M8x16	4.5	225.5	17
F 31 2/3	**P80**	19	21.8	6	200	165	130	—	M10x12	4	245	18
F 31 2/3	**P90**	24	27.3	8	200	165	130	—	M10x12	4	245	17
F 31 2/3	**P100**	28	31.3	8	250	215	180	—	M12x16	4.5	255	21
F 31 2/3	**P112**	28	31.3	8	250	215	180	—	M12x16	4.5	255	21
F 31 4	**P63**	11	12.8	4	140	115	95	—	M8x19	4	283	17
F 31 4	**P71**	14	16.3	5	160	130	110	—	M8x16	4.5	283	17
F 31 4	**P80**	19	21.8	6	200	165	130	—	M10x12	4	302.5	18
F 31 4	**P90**	24	27.3	8	200	165	130	—	M10x12	4	302.5	18
F 31 4	**P100**	28	31.3	8	250	215	180	—	M12x16	4.5	312.5	22
F 31 4	**P112**	28	31.3	8	250	215	180	—	M12x16	4.5	312.5	22

F 31...HS

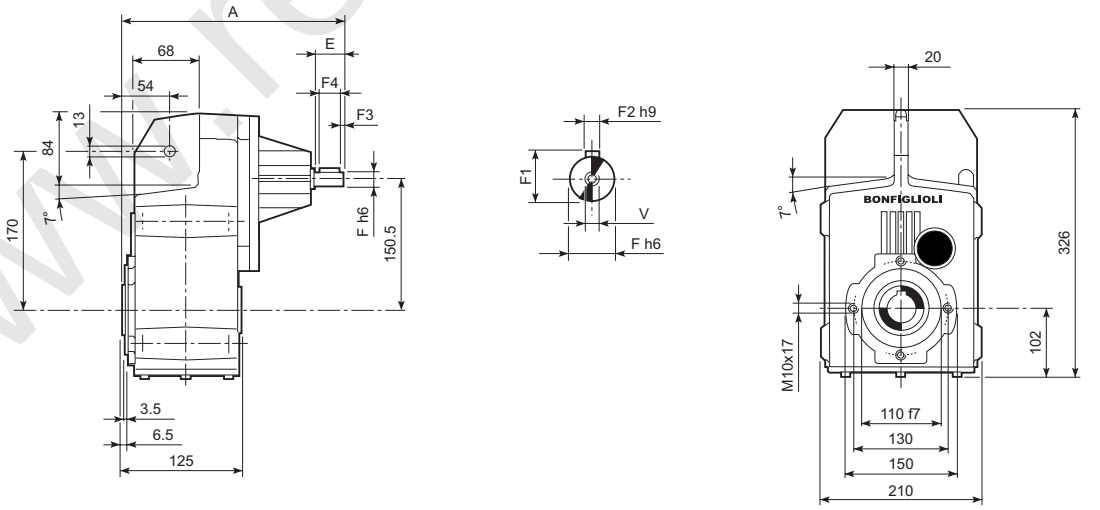

		A	E	F	F1	F2	F3	F4	V	Kg
F 31 2		275.5	40	19	21.5	6	2.5	35	M6x16	16.7
F 31 3	**HS**	275.5	40	19	21.5	6	2.5	35	M6x16	16.7
F 31 4		290	40	16	18	5	2.5	35	M6x16	16.5

www.redukto-mex.ru

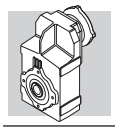

F 31...SK / SC

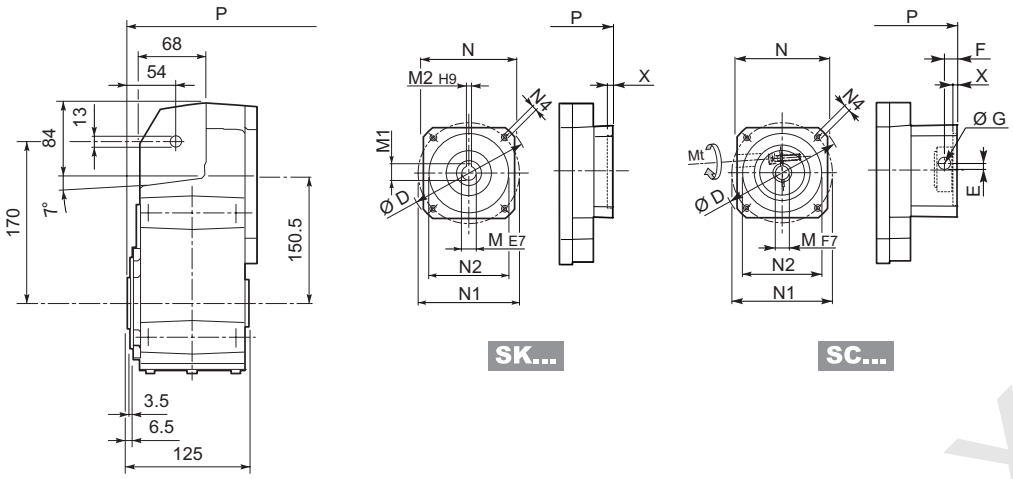

											2/3x		4x	
		D	M	M1	M2	N	N1	N2	N4	X	P	Kg	P	Kg
F 31 2/3/4	SK 60A	102	11	12.8	4	82	75	60	M5x10	3.5	197	16	254.5	16
F 31 2/3/4	SK 60B	102	14	16.3	5	82	75	60	M5x10	4	204	17	261.5	17
F 31 2/3/4	SK 80A	115	14	16.3	5	90	100	80	M6x12	4	204	17	261.5	17
F 31 2/3/4	SK 80C	120	19	21.8	6	96	100	80	M6x12	4	245	18	302.5	18
F 31 2/3/4	SK 95A	130	14	16.3	5	102	115	95	M8x12	4	245	18	302.5	18
F 31 2/3/4	SK 95B	130	19	21.8	6	102	115	95	M8x12	4	245	18	302.5	18
F 31 2/3/4	SK 95C	130	24	27.3	8	102	115	95	M8x12	4	245	18	302.5	18
F 31 2/3/4	SK 110A	150	19	21.8	6	120	130	110	M8x12	5	245	18	302.5	18
F 31 2/3/4	SK 110B	150	24	27.3	8	120	130	110	M8x12	5	245	18	302.5	18
F 31 2/3	SK 130A	188	24	27.3	8	142	165	130	M10x20	5	245	18	—	—

													2/3x		4x	
			Mt	D	E	F	G	M	N	N1	N2	N4	X	P	Kg	P	Kg
F 31 2/3/4	SC 60A	M6	15 Nm	102	7	12.5	12.5	11	82	75	60	M5x10	4	224	17	281.5	17
F 31 2/3/4	SC 60B	M6	15 Nm	102	7	12.5	12.5	14	82	75	60	M5x10	4	224	18	281.5	18
F 31 2/3/4	SC 80A	M6	15 Nm	115	6	12.5	12.5	14	90	100	80	M6x12	4	224	18	281.5	18
F 31 2/3/4	SC 80C	M6	15 Nm	120	15.5	14.5	17.75	19	96	100	80	M6x12	4	268.5	19	326	19
F 31 2/3/4	SC 95A	M6	15 Nm	130	16.5	15	17.75	14	102	115	95	M8x16	4	268.5	19	326	19
F 31 2/3/4	SC 95B	M6	15 Nm	130	16.5	15	17.75	19	102	115	95	M8x16	4	268.5	19	326	19
F 31 2/3/4	SC 95C	M6	15 Nm	130	16.5	15	17.75	24	102	115	95	M8x16	4	268.5	19	326	19
F 31 2/3/4	SC 110A	M6	15 Nm	150	16.5	16	17.75	19	120	130	110	M8x16	5	268.5	20	326	20
F 31 2/3/4	SC 110B	M6	15 Nm	150	16.5	16	17.75	24	120	130	110	M8x16	5	268.5	20	326	20
F 31 2/3	SC 130A	M6	15 Nm	188	19	16	17.75	24	142	165	130	M10x20	5	268.5	21	—	—

www.redukto-rnex.ru

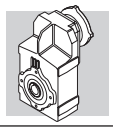

F 31...H

H35
STANDARD

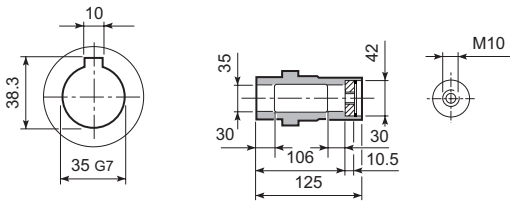

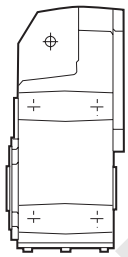

F 31...S

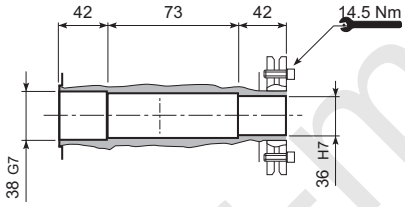

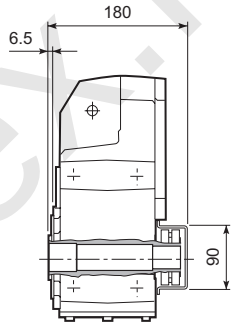

F 31...R

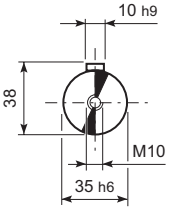

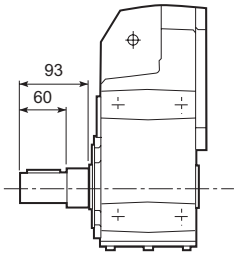

F 31...QF

	Ø
QF35	35
QF40	40

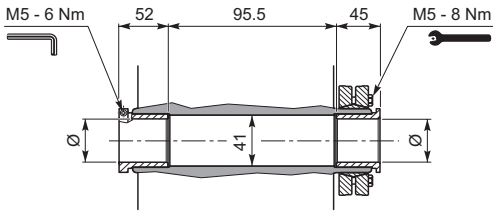

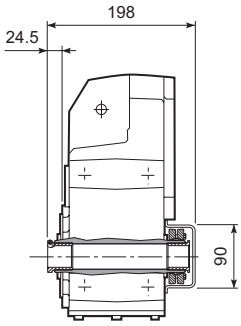

F 31...F...

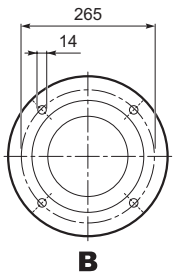

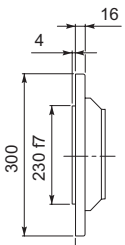

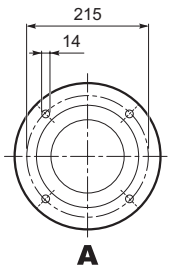

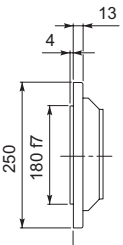

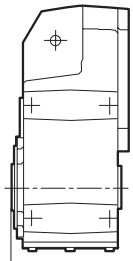

33

33

www.reduktor-mex.ru

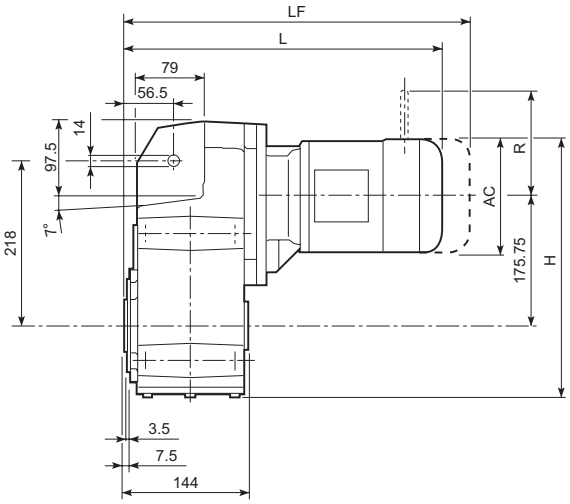

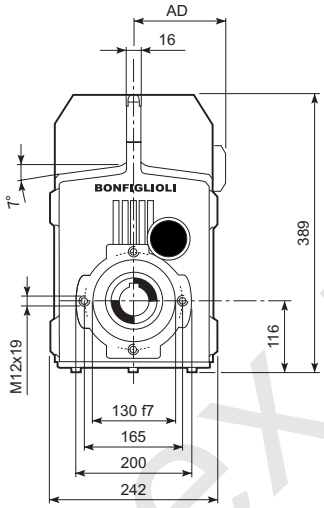

								M_FD M_FA		M_FD		M_FA	
			AC	H	L	AD	Kg	LF	Kg	R	AD	R	AD
F 41 2/3	**S1**	**M1S**	138	360.8	377	108	44	440	47	103	132	124	108
F 41 2/3	**S1**	**M1L**	138	360.8	401	108	46	462	48	103	132	124	108
F 41 2/3	**S2**	**M2S**	156	369.8	430	119	49	500	53	129	143	134	119
F 41 2/3	**S3**	**M3S**	195	389.3	473	142	54	569	62	160	155	160	142
F 41 2/3	**S3**	**M3L**	195	389.3	505	142	62	596	69	160	155	160	142
F 41 2/3	**S4**	**M4**	258	420.8	613	193	96	722	114	226	193	217	193
F 41 2/3	**S4**	**M4LC**	258	420.8	648	193	104	747	122	226	193	217	193
F 41 4	**S05**	**M05**	231	352.3	433.5	95	45	499.5	46	96	119	116	95
F 41 4	**S1**	**M1S**	138	360.8	438.5	108	45	501.5	48	103	132	124	108
F 41 4	**S1**	**M1L**	138	360.8	462.5	108	47	523.5	49	103	132	124	108
F 41 4	**S2**	**M2S**	156	369.8	491.5	119	50	561.5	58	129	143	134	119
F 41 4	**S3**	**M3S**	195	389.3	534.5	142	55	630.5	62	160	155	160	142
F 41 4	**S3**	**M3L**	195	389.3	566.5	142	63	657.5	70	160	155	160	142

www.reduktor-mex.ru

F 41...P(IEC)

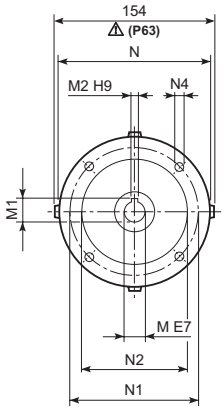

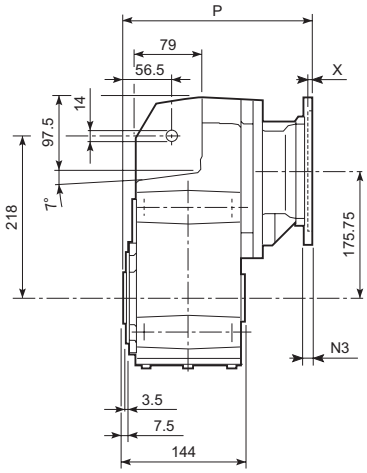

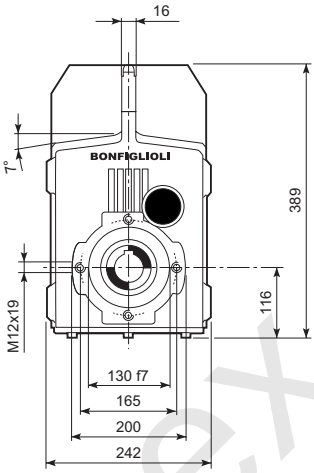

		M	M1	M2	N	N1	N2	N3	N4	X	P	Kg
F 41 2/3	**P63**	11	12.8	4	140	115	95	—	M8x19	4	246	42
F 41 2/3	**P71**	14	16.3	5	160	130	110	—	M8x16	4.5	246	42
F 41 2/3	**P80**	19	21.8	6	200	165	130	—	M10x12	4	265.5	43
F 41 2/3	**P90**	24	27.3	8	200	165	130	—	M10x12	4	265.5	43
F 41 2/3	**P100**	28	31.3	8	250	215	180	—	M12x16	4.5	275.5	47
F 41 2/3	**P112**	28	31.3	8	250	215	180	—	M12x16	4.5	275.5	47
F 41 2/3	**P132**	38	41.3	10	300	265	230	16	14	5	312	50
F 41 4	**P63**	11	12.8	4	140	115	95	—	M8x19	4	307.5	44
F 41 4	**P71**	14	16.3	5	160	130	110	—	M8x16	4.5	307.5	44
F 41 4	**P80**	19	21.8	6	200	165	130	—	M10x12	4	327	45
F 41 4	**P90**	24	27.3	8	200	165	130	—	M10x12	4	327	45
F 41 4	**P100**	28	31.3	8	250	215	180	—	M12x16	4.5	337	49
F 41 4	**P112**	28	31.3	8	250	215	180	—	M12x16	4.5	337	49

F 41...HS

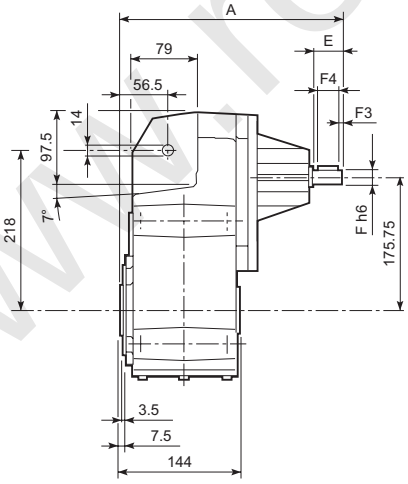

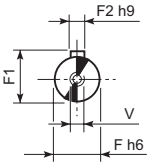

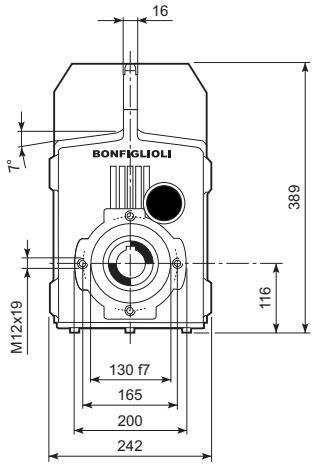

		A	E	F	F1	F2	F3	F4	V	Kg
F 41 2		335.5	50	24	27	8	2.5	45	M8x19	44.9
F 41 3	**HS**	335.5	50	24	27	8	2.5	45	M8x19	46.4
F 41 4		357.5	40	19	21.5	6	2.5	35	M6x16	43.5

www.redukt0r-mex.ru

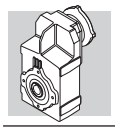

F 41...SK / SC

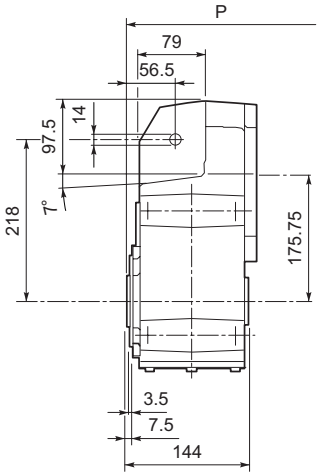

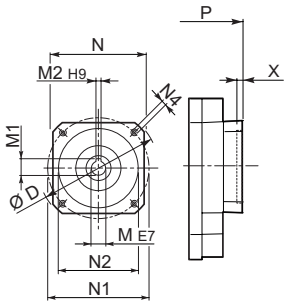

SK...

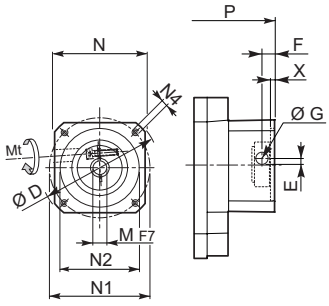

SC...

											2/3x		4x	
		D	M	M1	M2	N	N1	N2	N4	X	P	Kg	P	Kg
F 41 4	SK 60A	102	11	12.8	4	82	75	60	M5x10	3.5	—	—	279	43
F 41 4	SK 60B	102	14	16.3	5	82	75	60	M5x10	4	—	—	286	44
F 41 4	SK 80A	115	14	16.3	5	90	100	80	M6x12	4	—	—	286	44
F 41 2/3	SK 80B	120	14	16.3	5	96	100	80	M6x12	4	265.5	43	—	—
F 41 2/3/4	SK 80C	120	19	21.8	6	96	100	80	M6x12	4	265.5	43	327	45
F 41 2/3/4	SK 95A	130	14	16.3	5	102	115	95	M8x12	4	265.5	43	327	45
F 41 2/3/4	SK 95B	130	19	21.8	6	102	115	95	M8x12	4	265.5	43	327	45
F 41 2/3/4	SK 95C	130	24	27.3	8	102	115	95	M8x12	4	265.5	43	327	45
F 41 2/3/4	SK 110A	150	19	21.8	6	120	130	110	M8x12	5	265.5	43	327	45
F 41 2/3/4	SK 110B	150	24	27.3	8	120	130	110	M8x12	5	265.5	43	327	45
F 41 2/3	SK 130A	188	24	27.3	8	142	165	130	M10x20	5	265.5	45	—	—
F 41 2/3	SK 130B	189	32	35.3	10	160	165	130	M10x20	5	312	47	—	—
F 41 2/3	SK 180A	240	32	35.3	10	192	215	180	M12x19	5	312	47	—	—
F 41 2/3	SK 180B	240	38	41.3	10	192	215	180	M12x19	5	312	47	—	—

														2/3x		4x	
		Mt		D	E	F	G	M	N	N1	N2	N4	X	P	Kg	P	Kg
F 41 4	SC 60A	M6	15 Nm	102	7	12.5	12.5	11	82	75	60	M5x10	4	—	—	306	44
F 41 4	SC 60B	M6	15 Nm	102	7	12.5	12.5	14	82	75	60	M5x10	4	—	—	306	45
F 41 4	SC 80A	M6	15 Nm	115	6	12.5	12.5	14	90	100	80	M6x12	4	—	—	306	45
F 41 2/3	SC 80B	M6	15 Nm	120	15.5	14.5	17.75	14	96	100	80	M6x12	4	289	44	—	—
F 41 2/3/4	SC 80C	M6	15 Nm	120	15.5	14.5	17.75	19	96	100	80	M6x12	4	289	44	350.5	46
F 41 2/3/4	SC 95A	M6	15 Nm	130	16.5	15	17.75	14	102	115	95	M8x16	4	289	44	350.5	46
F 41 2/3/4	SC 95B	M6	15 Nm	130	16.5	15	17.75	19	102	115	95	M8x16	4	289	44	350.5	46
F 41 2/3/4	SC 95C	M6	15 Nm	130	16.5	15	17.75	24	102	115	95	M8x16	4	289	44	350.5	46
F 41 2/3/4	SC 110A	M6	15 Nm	150	16.5	16	17.75	19	120	130	110	M8x16	5	289	45	350.5	47
F 41 2/3/4	SC 110B	M6	15 Nm	150	16.5	16	17.75	24	120	130	110	M8x16	5	289	45	350.5	47
F 41 2/3	SC 130A	M6	15 Nm	188	19	16	17.75	24	142	165	130	M10x20	5	289	46	—	—
F 41 2/3	SC 130B	M8	36 Nm	189	20	17	17.75	32	160	165	130	M10x20	5	335	50	—	—
F 41 2/3	SC 180A	M8	36 Nm	240	20	17.5	17.75	32	192	215	180	M12x24	5	339	50	—	—
F 41 2/3	SC 180B	M8	36 Nm	240	20	17.5	17.75	38	192	215	180	M12x24	5	339	50	—	—

www.redukto-mex.ru

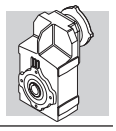

F 41...H

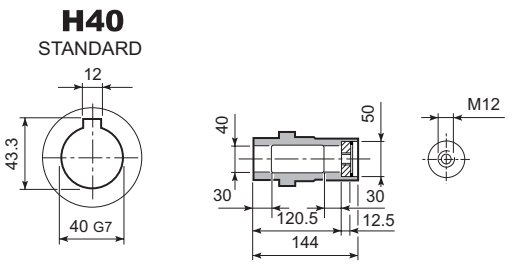

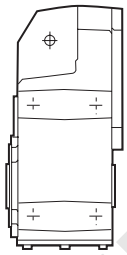

F 41...S

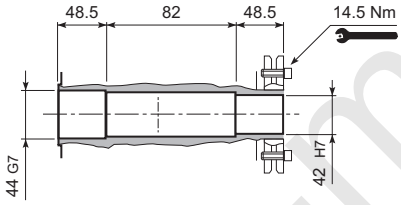

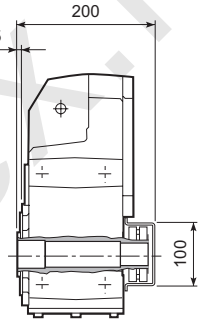

F 41...R

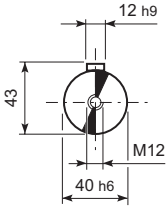

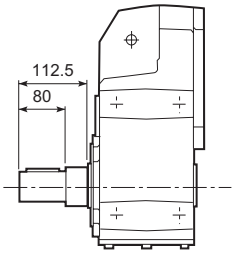

F 41...QF

	Ø
QF42	42
QF45	45

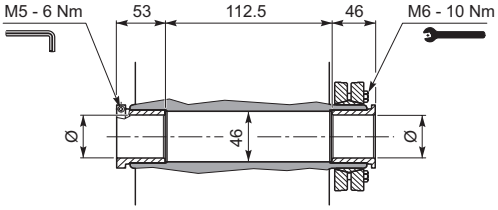

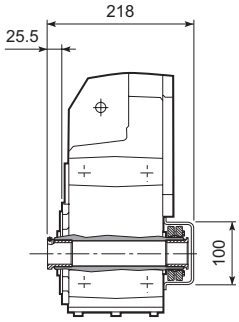

F 41...F...

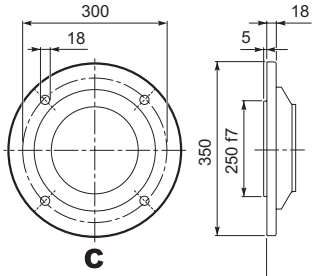

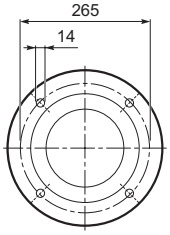

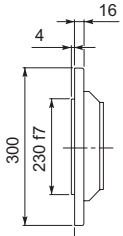

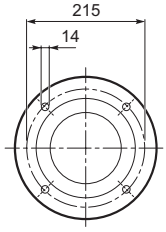

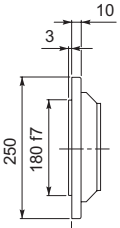

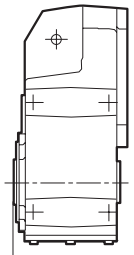

www.reduktor-mex.ru

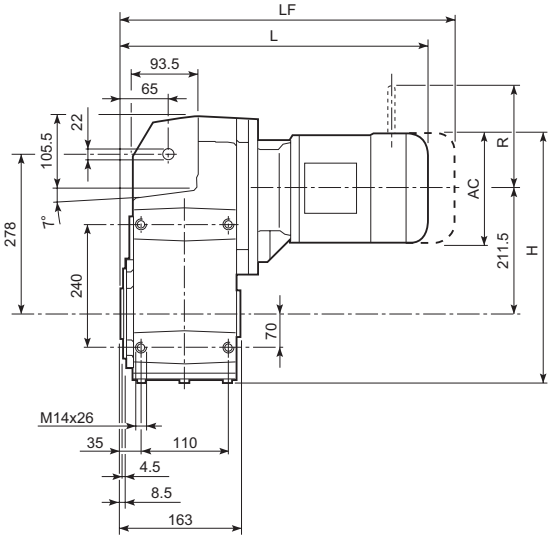

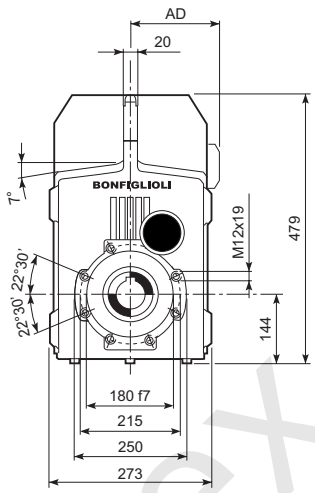

								M_FD M_FA		M_FD		M_FA	
			AC	H	L	AD	Kg	LF	Kg	R	AD	R	AD
F 51 2/3	**S1**	**M1S**	138	424	399	108	72	462	75	103	132	124	108
F 51 2/3	**S1**	**M1L**	138	424	423	108	73	484	76	103	132	124	108
F 51 2/3	**S2**	**M2S**	156	433	452	119	73	522	76	129	143	134	119
F 51 2/3	**S3**	**M3S**	195	452.5	495	142	77	591	85	160	155	160	142
F 51 2/3	**S3**	**M3L**	195	452.5	527	142	85	618	92	160	155	160	142
F 51 2/3	**S4**	**M4**	258	484	635	193	119	744	137	226	193	217	193
F 51 2/3	**S4**	**M4LC**	258	484	670	193	127	769	145	226	193	217	193
F 51 4	**S1**	**M1S**	138	424	470.5	108	74	533.5	77	103	132	124	108
F 51 4	**S1**	**M1L**	138	424	494.5	108	75	555.5	78	103	132	124	108
F 51 4	**S2**	**M2S**	156	433	523.5	119	79	593.5	83	129	143	134	119
F 51 4	**S3**	**M3S**	195	452.5	566.5	142	84	662.5	91	160	155	160	142
F 51 4	**S3**	**M3L**	195	452.5	598.5	142	91	689.5	98	160	155	160	142

www.reduktor-mex.ru

F 51...P(IEC)

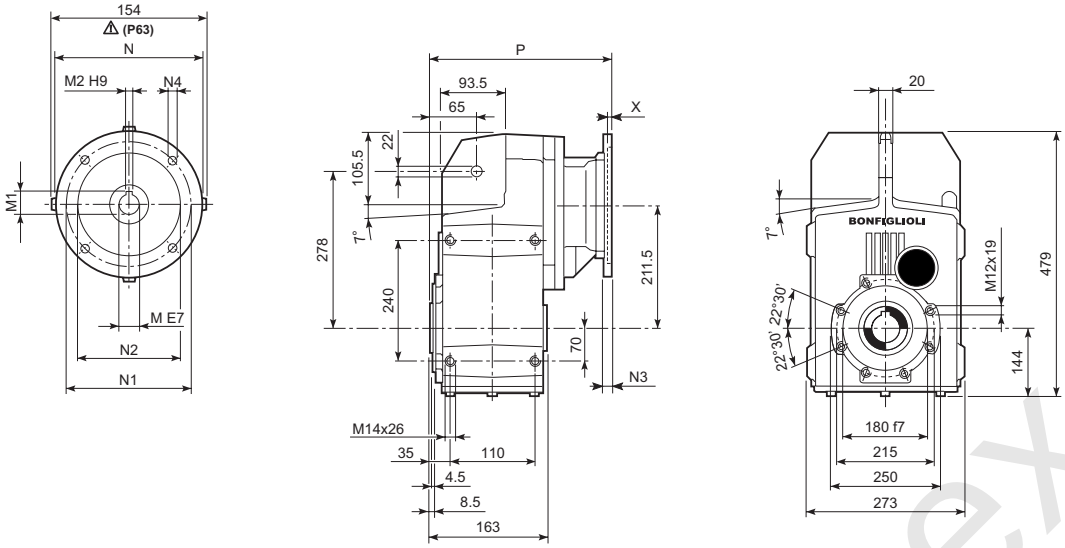

		M	M1	M2	N	N1	N2	N3	N4	X	P	Kg
F 51 2/3	**P63**	11	12.8	4	140	115	95	—	M8x19	4	268	65
F 51 2/3	**P71**	14	16.3	5	160	130	110	—	M8x16	4.5	268	65
F 51 2/3	**P80**	19	21.8	6	200	165	130	—	M10x12	4	287.5	67
F 51 2/3	**P90**	24	27.3	8	200	165	130	—	M10x12	4	287.5	67
F 51 2/3	**P100**	28	31.3	8	250	215	180	—	M12x16	4.5	297.5	71
F 51 2/3	**P112**	28	31.3	8	250	215	180	—	M12x16	4.5	297.5	71
F 51 2/3	**P132**	38	41.3	10	300	265	230	16	14	5	334	74
F 51 2/3	**P160**	42	45.3	12	350	300	250	23	18	5.5	384.5	78
F 51 2/3	**P180**	48	51.8	14	350	300	250	23	18	5.5	384.5	78
F 51 4	**P63**	11	12.8	4	140	115	95	—	M8x19	4	339.5	70
F 51 4	**P71**	14	16.3	5	160	130	110	—	M8x16	4.5	339.5	70
F 51 4	**P80**	19	21.8	6	200	165	130	—	M10x12	4	359	71
F 51 4	**P90**	24	27.3	8	200	165	130	—	M10x12	4	359	71
F 51 4	**P100**	28	31.3	8	250	215	180	—	M12x16	4.5	369	75
F 51 4	**P112**	28	31.3	8	250	215	180	—	M12x16	4.5	369	75

F 51...HS

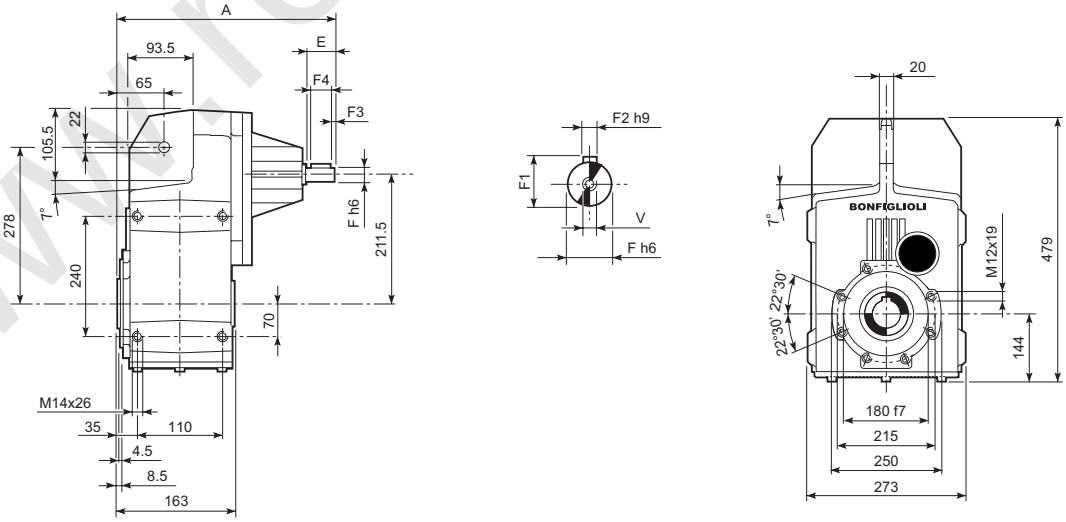

		A	E	F	F1	F2	F3	F4	V	Kg
F 51 2		357.5	50	24	27	8	2.5	45	M8x19	65
F 51 3	**HS**	357.5	50	24	27	8	2.5	45	M8x19	68
F 51 4		389.5	40	19	21.5	6	2.5	35	M6x16	70

www.redukTor-mex.ru

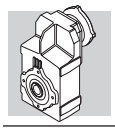

F 51...SK / SC

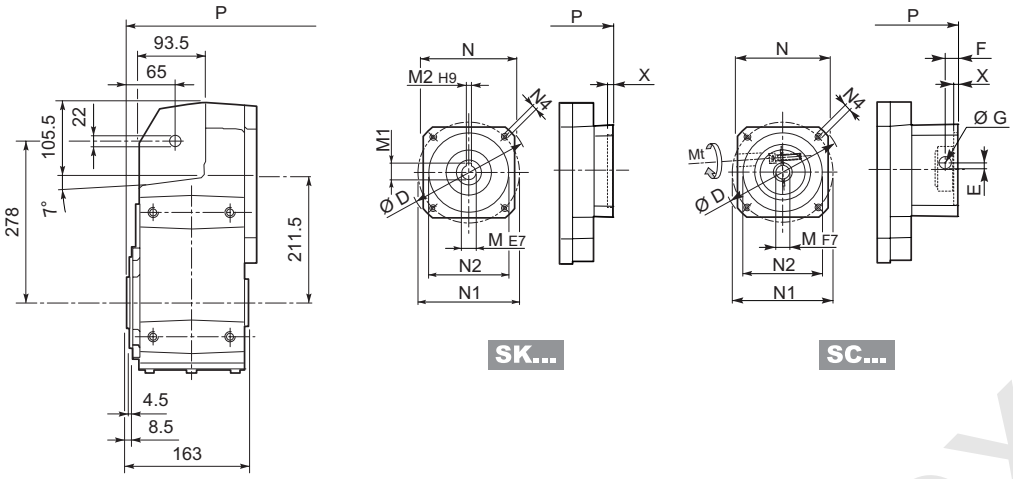

		D	M	M1	M2	N	N1	N2	N4	X	2/3x P	2/3x Kg	4x P	4x Kg
F 51 4	**SK 60A**	102	11	12.8	4	82	75	60	M5x10	3.5	—	—	311	70
F 51 4	**SK 60B**	102	14	16.3	5	82	75	60	M5x10	4	—	—	318	70
F 51 4	**SK 80A**	115	14	16.3	5	90	100	80	M6x12	4	—	—	318	70
F 51 2/3	**SK 80B**	120	14	16.3	5	96	100	80	M6x12	4	287.5	67	—	—
F 51 2/3/4	**SK 80C**	120	19	21.8	6	96	100	80	M6x12	4	287.5	67	359	71
F 51 2/3/4	**SK 95A**	130	14	16.3	5	102	115	95	M8x12	4	287.5	67	359	71
F 51 2/3/4	**SK 95B**	130	19	21.8	6	102	115	95	M8x12	4	287.5	67	359	71
F 51 2/3/4	**SK 95C**	130	24	27.3	8	102	115	95	M8x12	4	287.5	67	359	71
F 51 2/3/4	**SK 110A**	150	19	21.8	6	120	130	110	M8x12	5	287.5	67	359	71
F 51 2/3/4	**SK 110B**	150	24	27.3	8	120	130	110	M8x12	5	287.5	67	359	71
F 51 2/3/4	**SK 130A**	188	24	27.3	8	142	165	130	M10x20	5	287.5	69	359	73
F 51 2/3	**SK 130B**	189	32	35.3	10	160	165	130	M10x20	5	334	75	—	—
F 51 2/3	**SK 180A**	240	32	35.3	10	192	215	180	M12x19	5	334	75	—	—
F 51 2/3	**SK 180B**	240	38	41.3	10	192	215	180	M12x19	5	334	75	—	—

		Mt		D	E	F	G	M	N	N1	N2	N4	X	2/3x P	2/3x Kg	4x P	4x Kg
F 51 4	**SC 60A**	M6	15 Nm	102	7	12.5	12.5	11	82	75	60	M5x10	4	—	—	338	70
F 51 4	**SC 60B**	M6	15 Nm	102	7	12.5	12.5	14	82	75	60	M5x10	4	—	—	338	71
F 51 4	**SC 80A**	M6	15 Nm	115	6	12.5	12.5	14	90	100	80	M6x12	4	—	—	338	71
F 51 2/3	**SC 80B**	M6	15 Nm	120	15.5	14.5	17.75	14	96	100	80	M6x12	4	311	70	—	—
F 51 2/3/4	**SC 80C**	M6	15 Nm	120	15.5	14.5	17.75	19	96	100	80	M6x12	4	311	70	382.5	74
F 51 2/3/4	**SC 95A**	M6	15 Nm	130	16.5	15	17.75	14	102	115	95	M8x16	4	311	70	382.5	74
F 51 2/3/4	**SC 95B**	M6	15 Nm	130	16.5	15	17.75	19	102	115	95	M8x16	4	311	70	382.5	74
F 51 2/3/4	**SC 95C**	M6	15 Nm	130	16.5	15	17.75	24	102	115	95	M8x16	4	311	70	382.5	74
F 51 2/3/4	**SC 110A**	M6	15 Nm	150	16.5	16	17.75	19	120	130	110	M8x16	5	311	71	382.5	75
F 51 2/3/4	**SC 110B**	M6	15 Nm	150	16.5	16	17.75	24	120	130	110	M8x16	5	311	71	382.5	75
F 51 2/3/4	**SC 130A**	M6	15 Nm	188	19	16	17.75	24	142	165	130	M10x20	5	311	72	382.5	76
F 51 2/3	**SC 130B**	M8	36 Nm	189	20	17	17.75	32	160	165	130	M10x20	5	357	75	—	—
F 51 2/3	**SC 180A**	M8	36 Nm	240	20	17.5	17.75	32	192	215	180	M12x24	5	361	75	—	—
F 51 2/3	**SC 180B**	M8	36 Nm	240	20	17.5	17.75	38	192	215	180	M12x24	5	361	75	—	—

www.redukto-rnex.ru

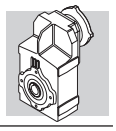

F 51...H

H50
STANDARD

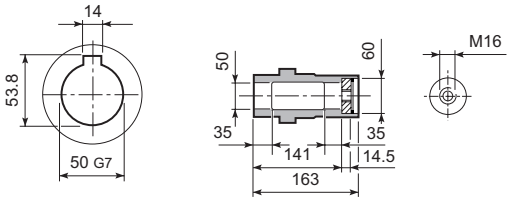

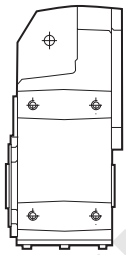

F 51...S

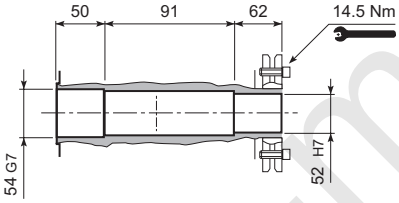

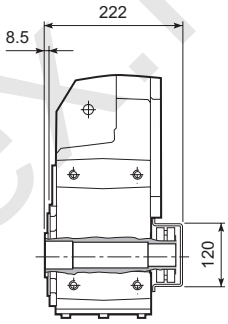

F 51...R

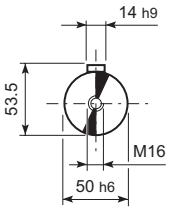

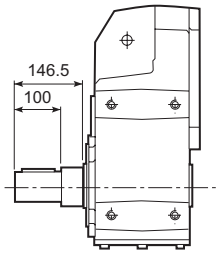

F 51...QF

	Ø
QF50	50
QF55	55

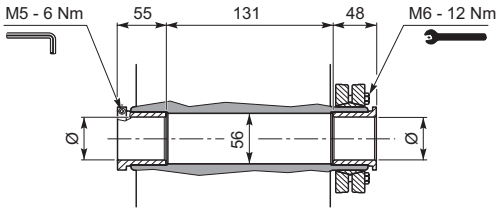

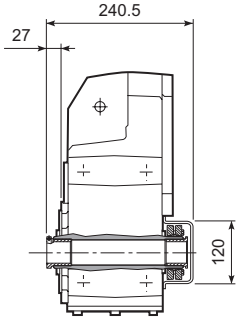

F 51...F...

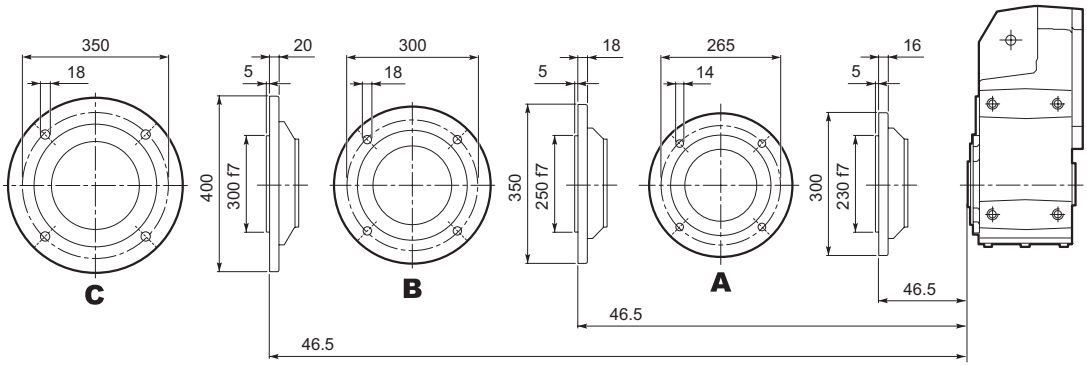

www.reduktor-mex.ru

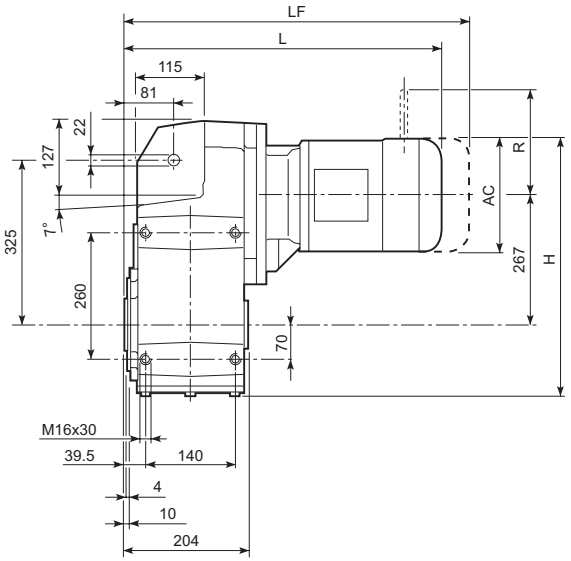

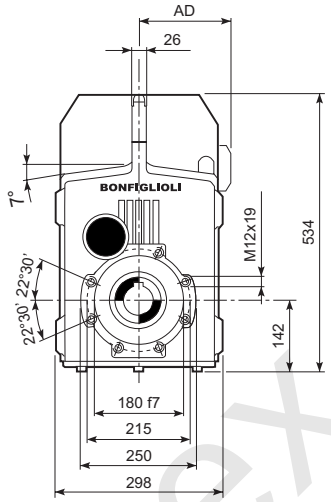

								M_FD M_FA		M_FD		M_FA	
			AC	H	L	AD	Kg	LF	Kg	R	AD	R	AD
F 60 3	**S2**	**M2S**	156	487	486.5	119	114	556.5	121	129	143	134	119
F 60 3	**S3**	**M3S**	195	506.5	529.5	142	114	625.5	122	160	155	160	142
F 60 3	**S3**	**M3L**	195	506.5	561.5	142	122	652.5	129	160	155	160	142
F 60 3	**S4**	**M4**	258	538	669.5	193	156	777.5	174	226	193	217	193
F 60 3	**S4**	**M4LC**	258	538	704.5	193	164	802.5	182	226	193	217	193
F 60 3	**S5**	**M5S**	310	564	756	245	184	896	214	266	245	247	245
F 60 3	**S5**	**M5L**	310	564	800	245	200	940	230	266	245	247	245
F 60 4	**S1**	**M1S**	138	478	504	108	112	567	114	103	132	124	108
F 60 4	**S1**	**M1L**	138	478	528	108	113	589	116	103	132	124	108
F 60 4	**S2**	**M2S**	156	487	557	119	117	627	121	129	143	134	119
F 60 4	**S3**	**M3S**	195	506.5	600	142	122	696	129	160	155	160	142
F 60 4	**S3**	**M3L**	195	506.5	632	142	129	723	136	160	155	160	142
F 60 4	**S4**	**M4**	258	538	740	193	156	849	174	226	193	217	193
F 60 4	**S4**	**M4LC**	258	538	775	193	164	874	182	226	193	217	193

www.reduktor-mex.ru

F 60...P(IEC)

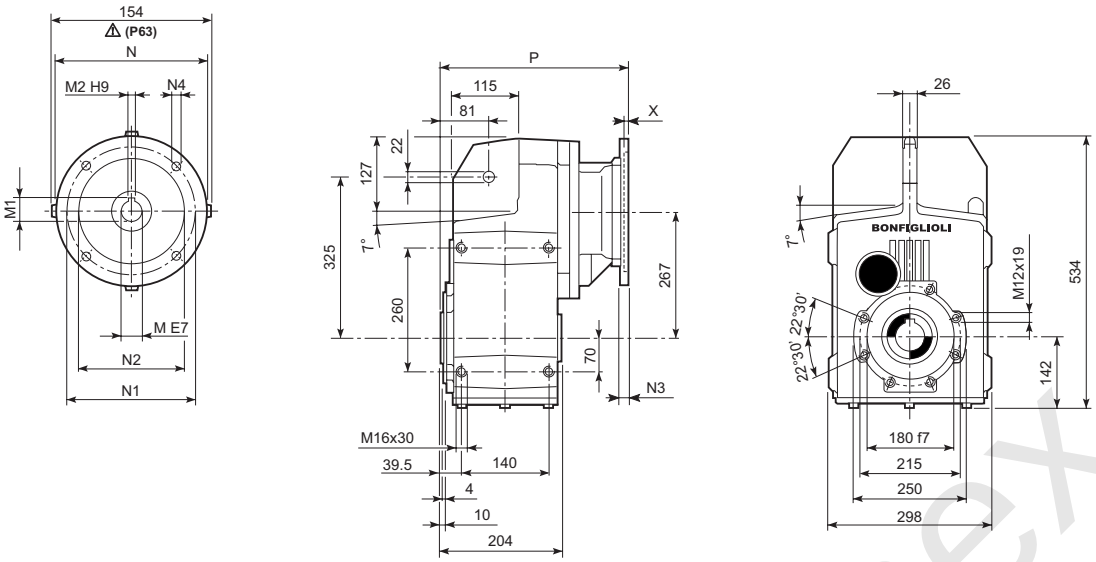

		M	M1	M2	N	N1	N2	N3	N4	X	P	Kg
F 60 3	**P63**	11	12.8	4	140	115	95	—	M8x19	4	302.5	103
F 60 3	**P71**	14	16.3	5	160	130	110	—	M8x16	4.5	302.5	103
F 60 3	**P80**	19	21.8	6	200	165	130	—	M10x12	4	322	104
F 60 3	**P90**	24	27.3	8	200	165	130	—	M10x12	4	322	104
F 60 3	**P100**	28	31.3	8	250	215	180	—	M12x16	4.5	331	108
F 60 3	**P112**	28	31.3	8	250	215	180	—	M12x16	4.5	331	108
F 60 3	**P132**	38	41.3	10	300	265	230	16	14	5	367.5	111
F 60 3	**P160**	42	45.3	12	350	300	250	23	18	5.5	419	116
F 60 3	**P180**	48	51.8	14	350	300	250	23	18	5.5	419	116
F 60 4	**P63**	11	12.8	4	140	115	95	—	M8x19	4	373	108
F 60 4	**P71**	14	16.3	5	160	130	110	—	M8x16	4.5	373	108
F 60 4	**P80**	19	21.8	6	200	165	130	—	M10x12	4	392.5	110
F 60 4	**P90**	24	27.3	8	200	165	130	—	M10x12	4	392.5	110
F 60 4	**P100**	28	31.3	8	250	215	180	—	M12x16	4.5	402.5	114
F 60 4	**P112**	28	31.3	8	250	215	180	—	M12x16	4.5	402.5	114

F 60...HS

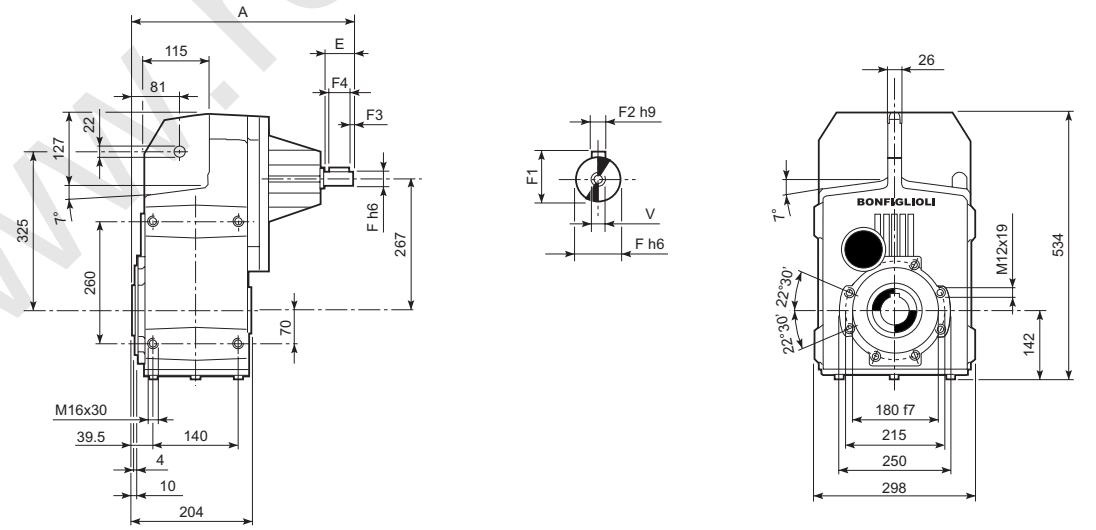

		A	E	F	F1	F2	F3	F4	V	Kg
F 60 3	**HS**	419	60	28	31	8	5.0	50	M10x22	108
F 60 4		462.5	50	24	27	8	2.5	45	M8x19	105

www.redukt-or-mex.ru

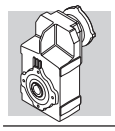

F 60...SK / SC

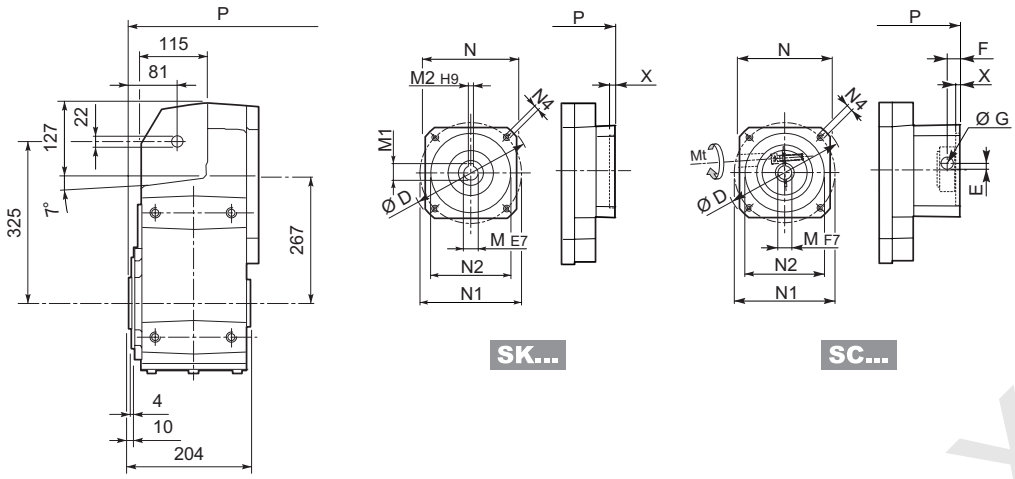

											3x		4x	
		D	M	M1	M2	N	N1	N2	N4	X	P	Kg	P	Kg
F 60 4	**SK 80B**	120	14	16.3	5	96	100	80	M6x12	4	—	—	392.5	109
F 60 3/4	**SK 80C**	120	19	21.8	6	96	100	80	M6x12	4	322	106	—	—
F 60 3/4	**SK 95A**	130	14	16.3	5	102	115	95	M8x12	4	322	106	392.5	112
F 60 3/4	**SK 95B**	130	19	21.8	6	102	115	95	M8x12	4	322	106	392.5	112
F 60 3/4	**SK 95C**	130	24	27.3	8	102	115	95	M8x12	4	322	106	392.5	112
F 60 3/4	**SK 110A**	140	19	21.8	6	120	130	110	M8x12	5	322	106	392.5	112
F 60 3/4	**SK 110B**	140	24	27.3	8	120	130	110	M8x12	5	322	106	392.5	112
F 60 3/4	**SK 130A**	188	24	27.3	8	142	165	130	M10x20	5	322	108	392.5	112
F 60 3	**SK 130B**	189	32	35.3	10	160	165	130	M10x20	5	368.5	109	392.5	114
F 60 3	**SK 180A**	240	32	35.3	10	192	215	180	M12x19	5	368.5	109	—	—
F 60 3	**SK 180B**	240	38	41.3	10	192	215	180	M12x19	5	368.5	109	—	—

														3x		4x	
			Mt	D	E	F	G	M	N	N1	N2	N4	X	P	Kg	P	Kg
F 60 4	**SC 80B**	M6	15 Nm	120	15.5	14.5	17.75	14	96	100	80	M6x12	4	—	—	416	113
F 60 3/4	**SC 80C**	M6	15 Nm	120	15.5	14.5	17.75	19	96	100	80	M6x12	4	345.5	107	416	113
F 60 3/4	**SC 95A**	M6	15 Nm	130	16.5	15	17.75	14	102	115	95	M8x16	4	345.5	107	416	113
F 60 3/4	**SC 95B**	M6	15 Nm	130	16.5	15	17.75	19	102	115	95	M8x16	4	345.5	107	416	113
F 60 3/4	**SC 95C**	M6	15 Nm	130	16.5	15	17.75	24	102	115	95	M8x16	4	345.5	107	416	113
F 60 3/4	**SC 110A**	M6	15 Nm	140	16.5	16	17.75	19	120	130	110	M8x16	5	345.5	108	416	113
F 60 3/4	**SC 110B**	M6	15 Nm	140	16.5	16	17.75	24	120	130	110	M8x16	5	345.5	108	416	113
F 60 3/4	**SC 130A**	M6	15 Nm	188	19	16	17.75	24	142	165	130	M10x20	5	345.5	109	416	115
F 60 3	**SC 130B**	M8	36 Nm	189	20	17	17.75	32	160	165	130	M10x20	5	390.5	112	—	—
F 60 3	**SC 180A**	M8	36 Nm	240	20	17.5	17.75	32	192	215	180	M12x24	5	394.5	112	—	—
F 60 3	**SC 180B**	M8	36 Nm	240	20	17.5	17.75	38	192	215	180	M12x24	5	394.5	112	—	—

www.redukton-mex.ru

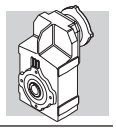

F 60...H

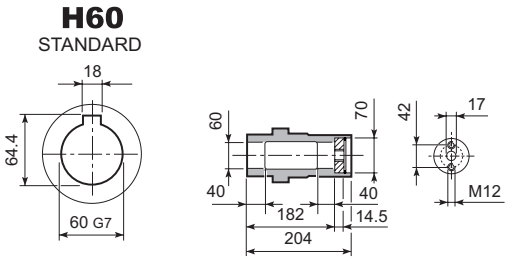

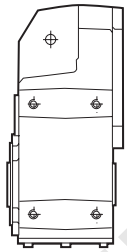

F 60...S

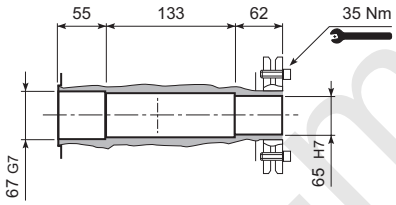

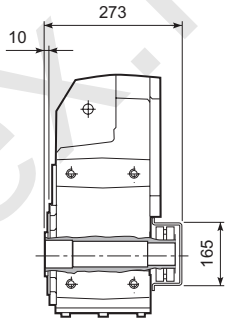

F 60...R

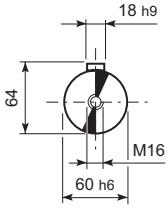

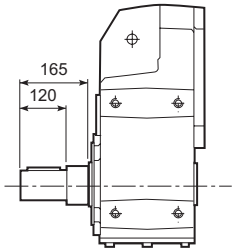

F 60...QF

	Ø
QF55	55
QF60	60
QF65	65
QF70	70

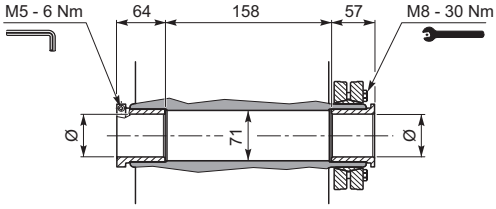

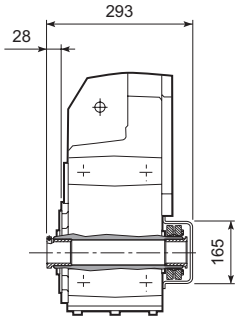

F 60...F...

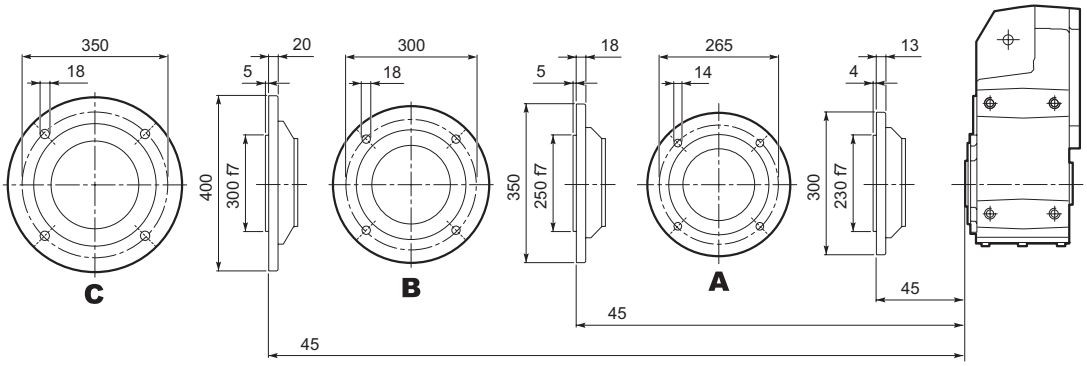

www.reduktor-mex.ru

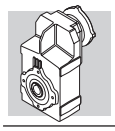

F 70...M

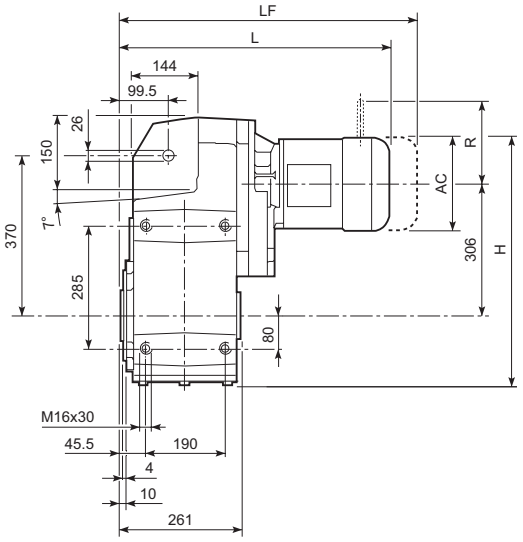

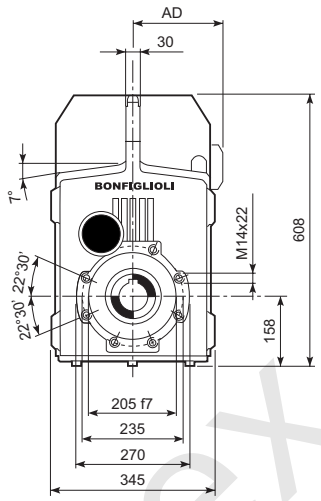

								M_FD M_FA		M_FD		M_FA	
			AC	H	L	AD	Kg	LF	Kg	R	AD	R	AD
F 70 3	**S2**	**M2S**	156	542	552	119	173	622	177	129	143	134	119
F 70 3	**S3**	**M3S**	195	561.5	595	142	178	691	186	160	155	160	142
F 70 3	**S3**	**M3L**	195	561.5	627	142	186	718	193	160	155	160	142
F 70 3	**S4**	**M4**	258	593	735	193	220	844	238	226	193	217	193
F 70 3	**S4**	**M4LC**	258	593	770	193	228	869	246	226	193	217	193
F 70 3	**S5**	**M5S**	310	619	821.5	245	248	961.5	278	266	245	247	245
F 70 3	**S5**	**M5L**	310	619	865.5	245	264	1005.5	294	266	245	247	245
F 70 4	**S1**	**M1S**	138	533	550	108	171	613	174	103	132	124	108
F 70 4	**S1**	**M1L**	138	533	574	108	173	635	176	103	132	124	108
F 70 4	**S2**	**M2S**	156	542	603	119	177	673	180	129	143	134	119
F 70 4	**S3**	**M3S**	195	561.5	646	142	181	742	189	160	155	160	142
F 70 4	**S3**	**M3L**	195	561.5	678	142	189	769	196	160	155	160	142
F 70 4	**S4**	**M4**	258	593	786	193	223	895	241	226	193	217	193
F 70 4	**S4**	**M4LC**	258	593	821	193	231	920	249	226	193	217	193

www.reduktor-mex.ru

F 70...P(IEC)

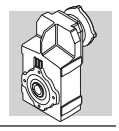

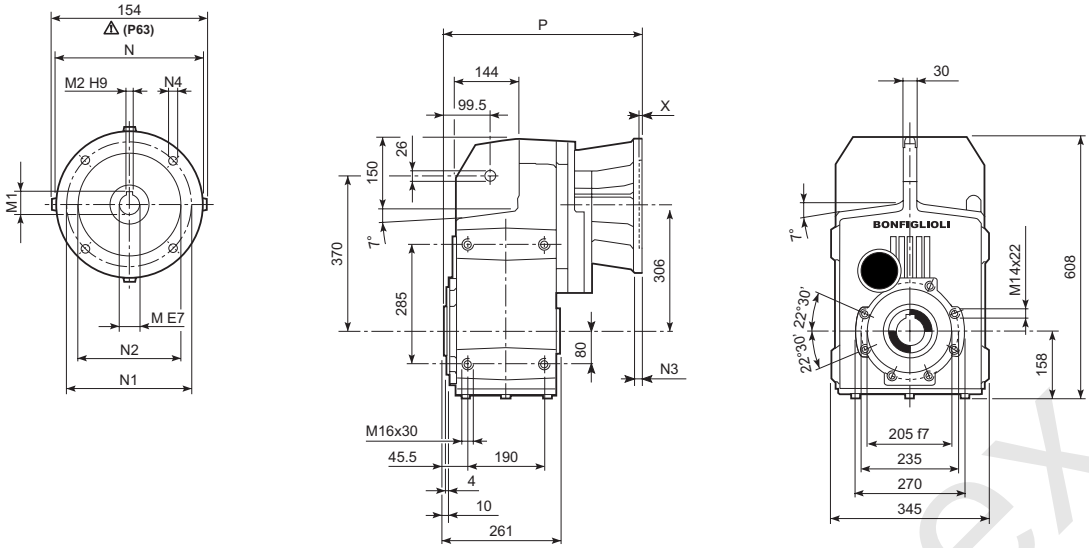

		M	M1	M2	N	N1	N2	N3	N4	X	P	Kg
F 70 3	**P80**	19	21.8	6	200	165	130	—	M10x12	4	387.5	167
F 70 3	**P90**	24	27.3	8	200	165	130	—	M10x12	4	387.5	167
F 70 3	**P100**	28	31.3	8	250	215	180	—	M12x16	4.5	397.5	171
F 70 3	**P112**	28	31.3	8	250	215	180	—	M12x16	4.5	397.5	171
F 70 3	**P132**	38	41.3	10	300	265	230	16	14	5	434	173
F 70 3	**P160**	42	45.3	12	350	300	250	23	18	6	489.5	185
F 70 3	**P180**	48	51.8	14	350	300	250	23	18	6	489.5	185
F 70 3	**P200**	55	59.3	16	400	350	300	—	M16x25	7	514.5	206
F 70 4	**P63**	11	12.8	4	140	115	95	—	M8x19	4	419	168
F 70 4	**P71**	14	16.3	5	160	130	110	—	M8x16	4.5	419	168
F 70 4	**P80**	19	21.8	6	200	165	130	—	M10x12	4	438.5	170
F 70 4	**P90**	24	27.3	8	200	165	130	—	M10x12	4	438.5	170
F 70 4	**P100**	28	31.3	8	250	215	180	—	M12x16	4.5	446.5	174
F 70 4	**P112**	28	31.3	8	250	215	180	—	M12x16	4.5	446.5	174
F 70 4	**P132**	38	41.3	10	300	265	230	16	14	5	482	176

F 70...HS

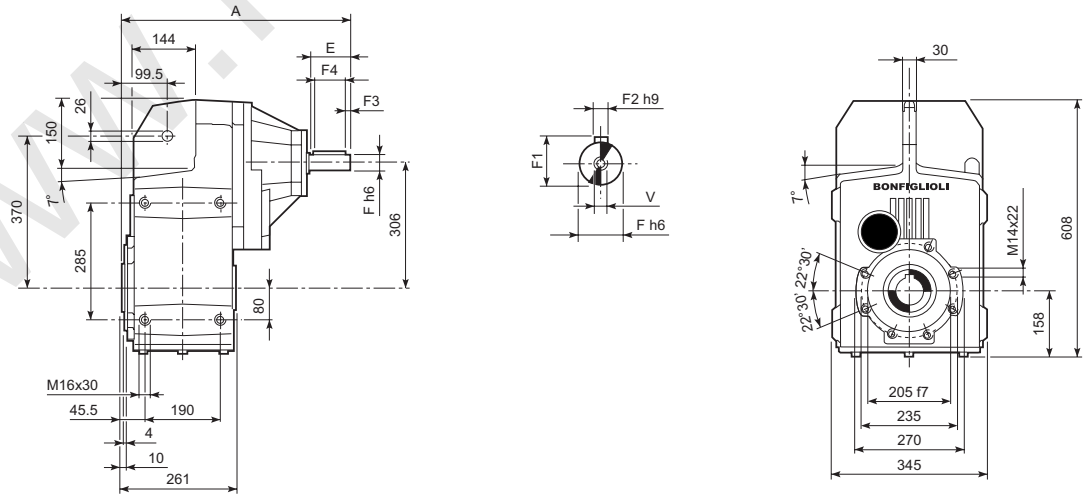

		A	E	F	F1	F2	F3	F4	V	Kg
F 70 3	**HS**	572	110	42	45	12	10	90	M12x28	186
F 70 4		508.5	50	24	27	8	2.5	45	M8x19	174

www.redukt0r-mex.ru

F 70...H

H80
STANDARD

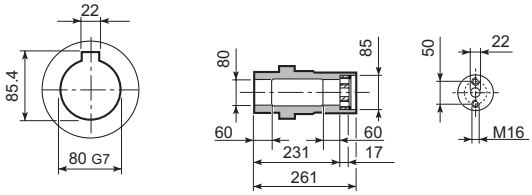

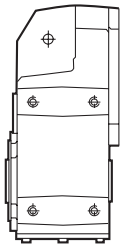

F 70...S

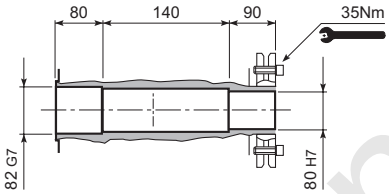

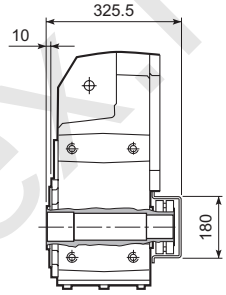

F 70...R

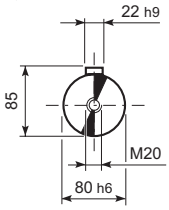

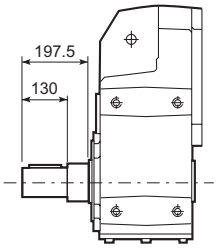

F 70...F...

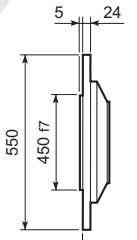

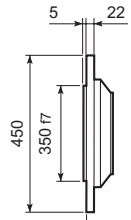

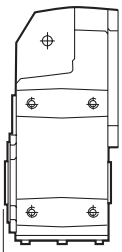

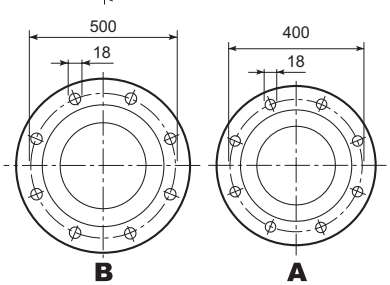

www.reduktor-mex.ru

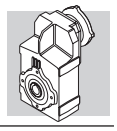

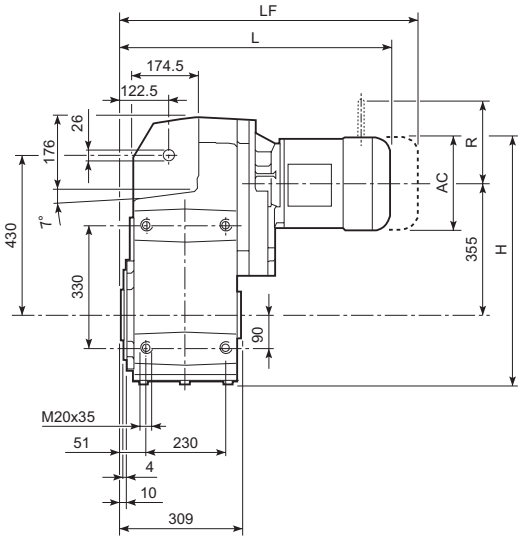

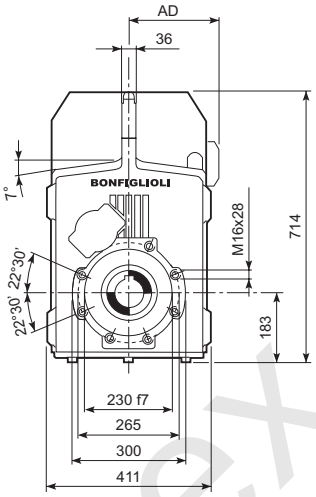

								M_FD M_FA		M_FD		M_FA	
			AC	H	L	AD	Kg	LF	Kg	R	AD	R	AD
F 80 3	**S4**	**M4**	258	667	793	193	307	902	325	226	193	217	193
F 80 3	**S4**	**M4LC**	258	667	828	193	315	927	333	226	193	217	193
F 80 3	**S5**	**M5S**	310	693	879.5	245	335	1019.5	365	266	245	247	245
F 80 3	**S5**	**M5L**	310	693	923.5	245	351	1063.5	381	266	245	247	245
F 80 4	**S1**	**M1S**	138	607	620	108	261	683	263	103	132	124	108
F 80 4	**S1**	**M1L**	138	607	644	108	262	705	265	103	132	124	108
F 80 4	**S2**	**M2S**	156	616	673	119	266	743	269	129	143	134	119
F 80 4	**S3**	**M3S**	195	635.5	716	142	271	812	278	160	155	160	142
F 80 4	**S3**	**M3L**	195	635.5	748	142	278	839	285	160	155	160	142
F 80 4	**S4**	**M4**	258	667	856	193	312	965	330	226	193	217	193
F 80 4	**S4**	**M4LC**	258	667	891	193	320	990	338	226	193	217	193

www.reduktor-mex.ru

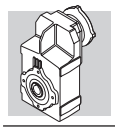

F 80...P(IEC)

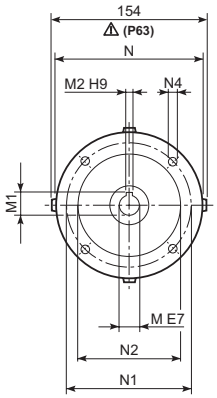

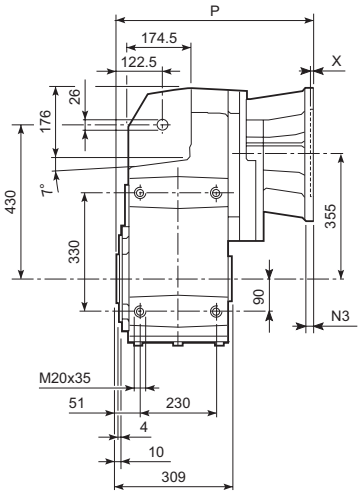

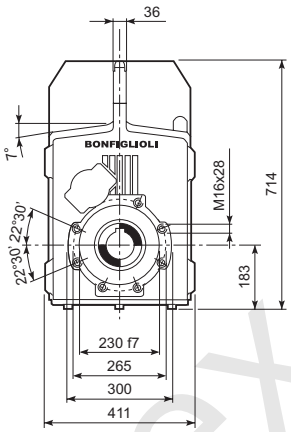

		M	M1	M2	N	N1	N2	N3	N4	X	P	Kg
F 80 3	**P80**	19	21.8	6	200	165	130	—	M10x12	4	445.5	255
F 80 3	**P90**	24	27.3	8	200	165	130	—	M10x12	4	445.5	255
F 80 3	**P100**	28	31.3	8	250	215	180	—	M12x16	4.5	455.5	259
F 80 3	**P112**	28	31.3	8	250	215	180	—	M12x16	4.5	455.5	259
F 80 3	**P132**	38	41.3	10	300	265	230	16	14	5	492	261
F 80 3	**P160**	42	45.3	12	350	300	250	23	18	6	547.5	276
F 80 3	**P180**	48	51.8	14	350	300	250	23	18	6	547.5	276
F 80 3	**P200**	55	59.3	16	400	350	300	—	M16x25	7	572.5	298
F 80 3	**P225**	60	64.4	18	450	400	350	25	18	6	618	298
F 80 4	**P63**	11	12.8	4	140	115	95	—	M8x19	4	489	258
F 80 4	**P71**	14	16.3	5	160	130	110	—	M8x16	4.5	489	258
F 80 4	**P80**	19	21.8	6	200	165	130	—	M10x12	4	508.5	260
F 80 4	**P90**	24	27.3	8	200	165	130	—	M10x12	4	508.5	260
F 80 4	**P100**	28	31.3	8	250	215	180	—	M12x16	4.5	518.5	264
F 80 4	**P112**	28	31.3	8	250	215	180	—	M12x16	4.5	518.5	264
F 80 4	**P132**	38	41.3	10	300	265	230	16	M12x16	5	552	266

F 80...HS

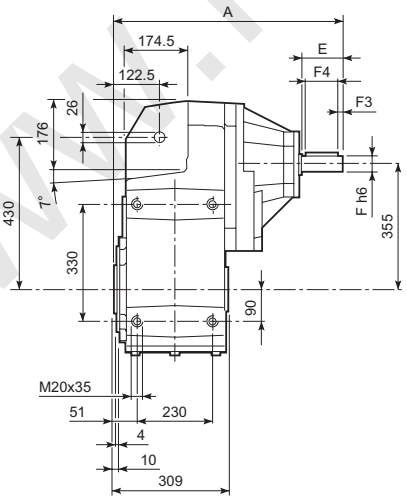

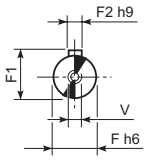

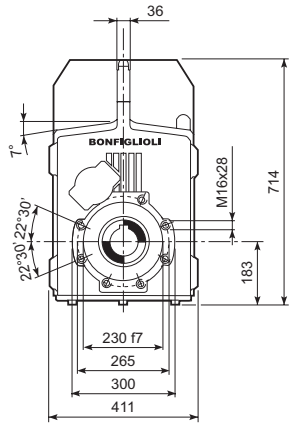

		A	E	F	F1	F2	F3	F4	V	Kg
F 80 3	**HS**	630	110	42	45	12	10	90	M12x28	273
F 80 4		575.5	50	24	27	8	2.5	45	M8x19	263

www.redukt0r-mex.ru

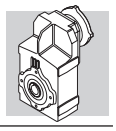

F 80...H

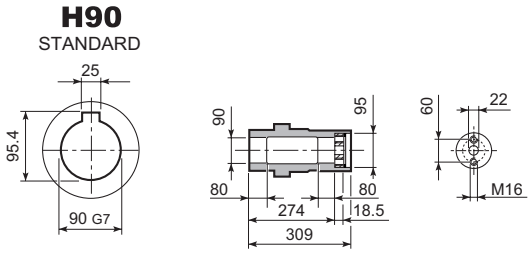

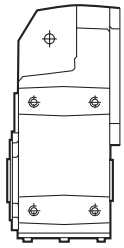

F 80...S

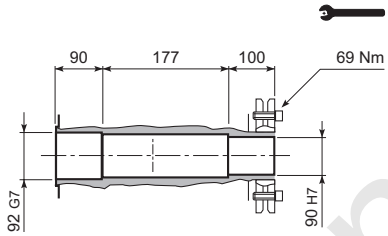

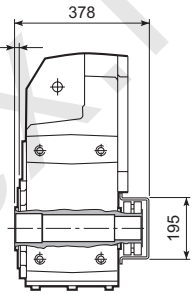

F 80...R

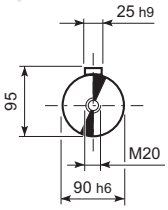

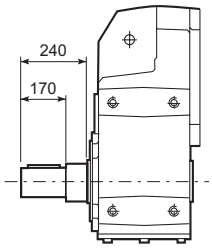

F 80...F...

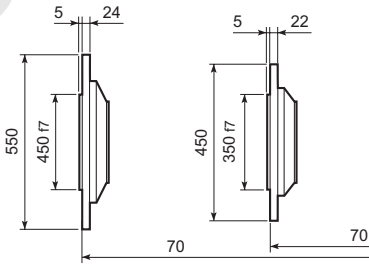

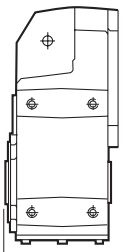

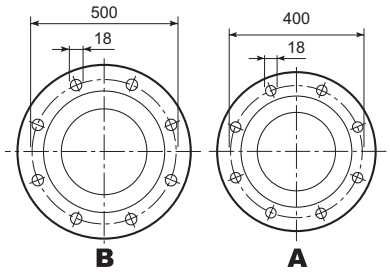

www.reduktor-mex.ru

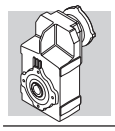

F 90...M

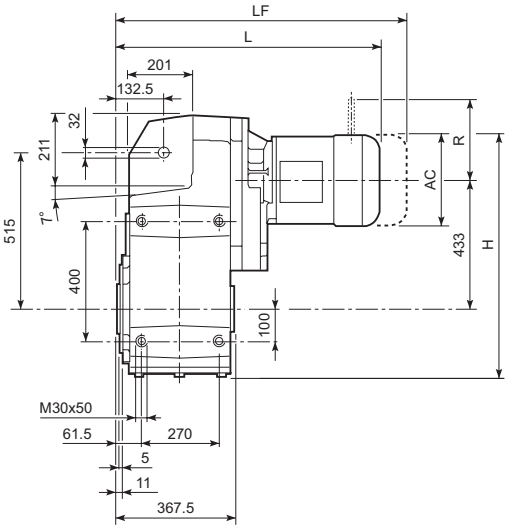

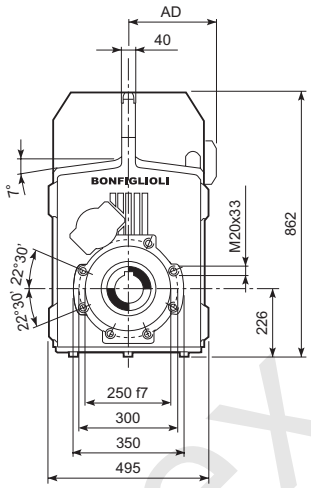

								M_FD M_FA		M_FD		M_FA	
			AC	H	L	AD	Kg	LF	Kg	R	AD	R	AD
F 90 3	**S3**	**M3S**	195	756	728	142	453	824	460	160	155	160	142
F 90 3	**S3**	**M3L**	195	756	760	142	460	851	467	160	155	160	142
F 90 3	**S4**	**M4**	258	787.5	868	193	494	977	512	226	193	217	193
F 90 3	**S5**	**M5L**	310	813.5	998.5	245	538	1138.5	568	266	245	247	245
F 90 4	**S2**	**M2S**	156	736.5	768	119	456	838	460	129	143	134	119
F 90 4	**S3**	**M3S**	195	756	811	142	460	907	468	160	155	160	142
F 90 4	**S3**	**M3L**	195	756	843	142	468	934	475	160	155	160	142
F 90 4	**S4**	**M4**	258	787.5	951	193	502	1060	520	226	193	217	193
F 90 4	**S4**	**M4LC**	258	787.5	986	193	510	1085	528	226	193	217	193

www.reduktor-mex.ru

F 90...P(IEC)

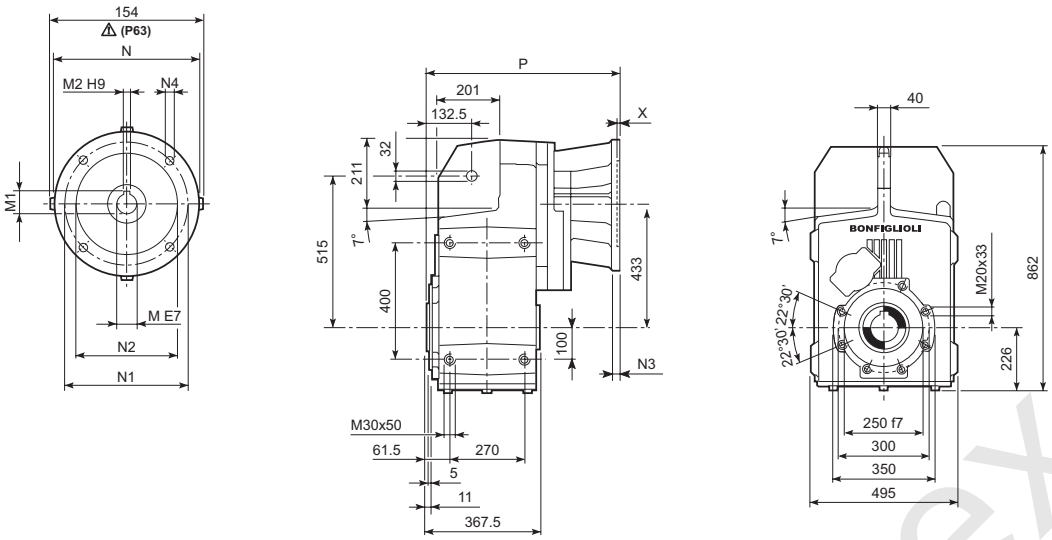

		M	M1	M2	N	N1	N2	N3	N4	X	P	Kg
F 90 3	**P80**	19	21.8	6	200	165	130	—	M10x12	4	520.5	442
F 90 3	**P90**	24	27.3	8	200	165	130	—	M10x12	4	520.5	442
F 90 3	**P100**	28	31.3	8	250	215	180	—	M12x16	4.5	530.5	446
F 90 3	**P112**	28	31.3	8	250	215	180	—	M12x16	4.5	530.5	446
F 90 3	**P132**	38	41.3	10	300	265	230	16	14	5	567	449
F 90 3	**P160**	42	45.3	12	350	300	250	23	18	6	622.5	463
F 90 3	**P180**	48	51.8	14	350	300	250	23	18	6	622.5	463
F 90 3	**P200**	55	59.3	16	400	350	300	—	M16x25	7	647.5	485
F 90 3	**P225**	60	64.4	18	450	400	350	30	18	6	693	485
F 90 3	**P250**	65	69.4	18	550	500	450	30	18	6	723	507
F 90 4	**P63**	11	12.8	4	140	115	95	—	M8x19	4	584	448
F 90 4	**P71**	14	16.3	5	160	130	110	—	M8x16	4.5	584	448
F 90 4	**P80**	19	21.8	6	200	165	130	—	M10x12	4	603.5	450
F 90 4	**P90**	24	27.3	8	200	165	130	—	M10x12	4	603.5	450
F 90 4	**P100**	28	31.3	8	250	215	180	—	M12x16	4.5	613.5	454
F 90 4	**P112**	28	31.3	8	250	215	180	—	M12x16	4.5	613.5	454
F 90 4	**P132**	38	41.3	10	300	265	230	16	14	5	650	455
F 90 4	**P160**	42	45.3	12	350	300	250	23	18	5.5	700.5	461
F 90 4	**P180**	48	51.8	14	350	300	250	23	18	5.5	700.5	461

F 90...HS

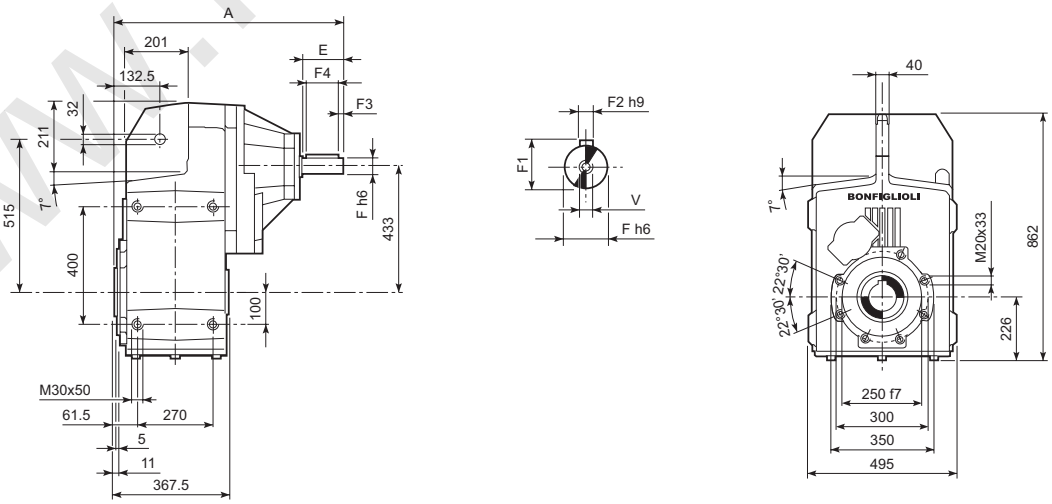

		A	E	F	F1	F2	F3	F4	V	Kg
F 90 3	**HS**	806.5	140	60	64	18	10	120	M16x36	485
F 90 4		673.5	50	24	27	8	2.5	45	M8x19	452

www.redukt or-mex.ru

F 90...H

H100
STANDARD

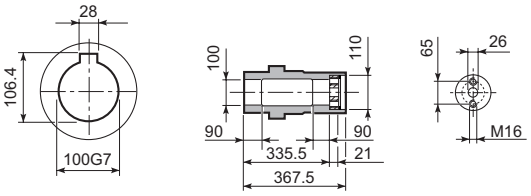

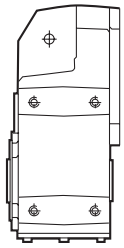

F 90...S

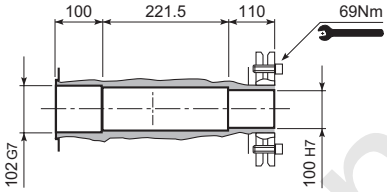

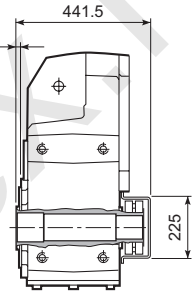

F 90...R

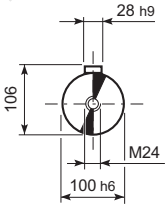

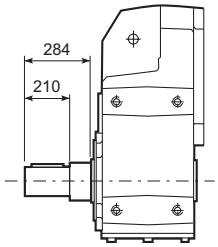

F 90...F...

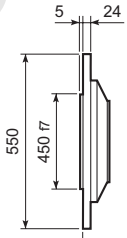

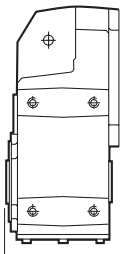

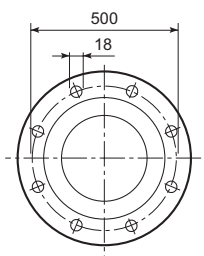

www.reduktor-mex.ru